RETURN TO MAIN MENU

IM274-A

June, 2010

SEMIAUTOMATIC WIRE FEEDER

Safety Depends on You

Lincoln arc welding and cutting equipment is designed and built with safety in mind. However, your overall safety can be increased by proper installation ... and thoughtful operation on your part. **DO NOT INSTALL, OPERATE OR REPAIR THIS EQUIPMENT WITHOUT READING THIS MANUAL AND THE SAFETY PRECAUTIONS CONTAINED THROUGHOUT.** And, most importantly, think before you act and be careful.

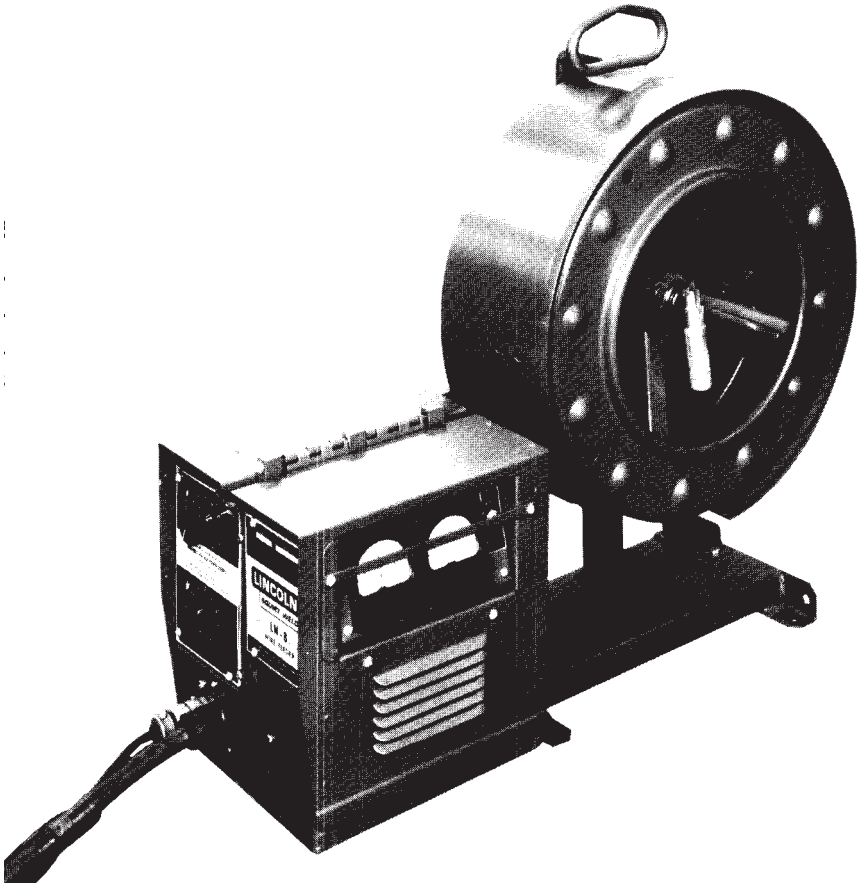

OPERATOR'S MANUAL

ISO 9001

Designed and Manufactured Under a Quality Program Certified by ABS Quality Evaluations, Inc. to ISO 9001 Requirements.

CERTIFICATE NUMBER: 30273

Copyright © Lincoln Global Inc.

LINCOLN® ELECTRIC

• World's Leader in Welding and Cutting Products •

• Sales and Service through Subsidiaries and Distributors Worldwide •

Cleveland, Ohio 44117-1199 U.S.A. TEL: 216.481.8100 FAX: 216.486.1751 WEB SITE: www.lincolnelectric.com

WARNING

CALIFORNIA PROPOSITION 65 WARNINGS

Diesel engine exhaust and some of its constituents are known to the State of California to cause cancer, birth defects, and other reproductive harm.

The Above For Diesel Engines

The engine exhaust from this product contains chemicals known to the State of California to cause cancer, birth defects, or other reproductive harm.

The Above For Gasoline Engines

ARC WELDING CAN BE HAZARDOUS. PROTECT YOURSELF AND OTHERS FROM POSSIBLE SERIOUS INJURY OR DEATH. KEEP CHILDREN AWAY. PACEMAKER WEARERS SHOULD CONSULT WITH THEIR DOCTOR BEFORE OPERATING.

Read and understand the following safety highlights. For additional safety information, it is strongly recommended that you purchase a copy of “Safety in Welding & Cutting - ANSI Standard Z49.1” from the American Welding Society, P.O. Box 351040, Miami, Florida 33135 or CSA Standard W117.2-1974. A Free copy of “Arc Welding Safety” booklet E205 is available from the Lincoln Electric Company, 22801 St. Clair Avenue, Cleveland, Ohio 44117-1199.

BE SURE THAT ALL INSTALLATION, OPERATION, MAINTENANCE AND REPAIR PROCEDURES ARE PERFORMED ONLY BY QUALIFIED INDIVIDUALS.

FOR ENGINE powered equipment.

1.a. Turn the engine off before troubleshooting and maintenance work unless the maintenance work requires it to be running.

1.b. Operate engines in open, well-ventilated areas or vent the engine exhaust fumes outdoors.

1.c. Do not add the fuel near an open flame welding arc or when the engine is running. Stop the engine and allow it to cool before refueling to prevent spilled fuel from vaporizing on contact with hot engine parts and igniting. Do not spill fuel when filling tank. If fuel is spilled, wipe it up and do not start engine until fumes have been eliminated.

1.d. Keep all equipment safety guards, covers and devices in position and in good repair.Keep hands, hair, clothing and tools away from V-belts, gears, fans and all other moving parts when starting, operating or repairing equipment.

1.e. In some cases it may be necessary to remove safety guards to perform required maintenance. Remove guards only when necessary and replace them when the maintenance requiring their removal is complete. Always use the greatest care when working near moving parts.

1.f. Do not put your hands near the engine fan. Do not attempt to override the governor or idler by pushing on the throttle control rods while the engine is running.

1.g. To prevent accidentally starting gasoline engines while turning the engine or welding generator during maintenance work, disconnect the spark plug wires, distributor cap or magneto wire as appropriate.

1.h. To avoid scalding, do not remove the radiator pressure cap when the engine is hot.

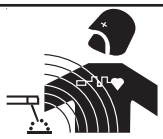

ELECTRIC AND MAGNETIC FIELDS may be dangerous

2.a. Electric current flowing through any conductor causes localized Electric and Magnetic Fields (EMF). Welding current creates EMF fields around welding cables and welding machines

2.b. EMF fields may interfere with some pacemakers, and welders having a pacemaker should consult their physician before welding.

2.c. Exposure to EMF fields in welding may have other health effects which are now not known.

2.d. All welders should use the following procedures in order to minimize exposure to EMF fields from the welding circuit:

2.d.1. Route the electrode and work cables together - Secure them with tape when possible.

2.d.2. Never coil the electrode lead around your body.

2.d.3. Do not place your body between the electrode and work cables. If the electrode cable is on your right side, the work cable should also be on your right side.

2.d.4. Connect the work cable to the workpiece as close as possible to the area being welded.

2.d.5. Do not work next to welding power source.

ELECTRIC SHOCK can kill.

3.a. The electrode and work (or ground) circuits are electrically "hot" when the welder is on. Do not touch these "hot" parts with your bare skin or wet clothing. Wear dry, hole-free gloves to insulate hands.

3.b. Insulate yourself from work and ground using dry insulation. Make certain the insulation is large enough to cover your full area of physical contact with work and ground.

In addition to the normal safety precautions, if welding must be performed under electrically hazardous conditions (in damp locations or while wearing wet clothing; on metal structures such as floors, gratings or scaffolds; when in cramped positions such as sitting, kneeling or lying, if there is a high risk of unavoidable or accidental contact with the workpiece or ground) use the following equipment:

- **Semiautomatic DC Constant Voltage (Wire) Welder.**
- **DC Manual (Stick) Welder.**
- **AC Welder with Reduced Voltage Control.**

3.c. In semiautomatic or automatic wire welding, the electrode, electrode reel, welding head, nozzle or semiautomatic welding gun are also electrically "hot".

3.d. Always be sure the work cable makes a good electrical connection with the metal being welded. The connection should be as close as possible to the area being welded.

3.e. Ground the work or metal to be welded to a good electrical (earth) ground.

3.f. Maintain the electrode holder, work clamp, welding cable and welding machine in good, safe operating condition. Replace damaged insulation.

3.g. Never dip the electrode in water for cooling.

3.h. Never simultaneously touch electrically "hot" parts of electrode holders connected to two welders because voltage between the two can be the total of the open circuit voltage of both welders.

3.i. When working above floor level, use a safety belt to protect yourself from a fall should you get a shock.

3.j. Also see Items 6.c. and 8.

ARC RAYS can burn.

4.a. Use a shield with the proper filter and cover plates to protect your eyes from sparks and the rays of the arc when welding or observing open arc welding. Headshield and filter lens should conform to ANSI Z87. I standards.

4.b. Use suitable clothing made from durable flame-resistant material to protect your skin and that of your helpers from the arc rays.

4.c. Protect other nearby personnel with suitable, non-flammable screening and/or warn them not to watch the arc nor expose themselves to the arc rays or to hot spatter or metal.

FUMES AND GASES can be dangerous.

5.a. Welding may produce fumes and gases hazardous to health. Avoid breathing these fumes and gases. When welding, keep your head out of the fume. Use enough ventilation and/or exhaust at the arc to keep fumes and gases away from the breathing zone. **When welding with electrodes which require special ventilation such as stainless or hard facing (see instructions on container or MSDS) or on lead or cadmium plated steel and other metals or coatings which produce highly toxic fumes, keep exposure as low as possible and within applicable OSHA PEL and ACGIH TLV limits using local exhaust or mechanical ventilation. In confined spaces or in some circumstances, outdoors, a respirator may be required. Additional precautions are also required when welding on galvanized steel.**

5. b. The operation of welding fume control equipment is affected by various factors including proper use and positioning of the equipment, maintenance of the equipment and the specific welding procedure and application involved. Worker exposure level should be checked upon installation and periodically thereafter to be certain it is within applicable OSHA PEL and ACGIH TLV limits.

5.c. Do not weld in locations near chlorinated hydrocarbon vapors coming from degreasing, cleaning or spraying operations. The heat and rays of the arc can react with solvent vapors to form phosgene, a highly toxic gas, and other irritating products.

5.d. Shielding gases used for arc welding can displace air and cause injury or death. Always use enough ventilation, especially in confined areas, to insure breathing air is safe.

5.e. Read and understand the manufacturer's instructions for this equipment and the consumables to be used, including the material safety data sheet (MSDS) and follow your employer's safety practices. MSDS forms are available from your welding distributor or from the manufacturer.

5.f. Also see item 1.b.

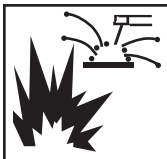

WELDING and CUTTING SPARKS can cause fire or explosion.

6.a. Remove fire hazards from the welding area. If this is not possible, cover them to prevent the welding sparks from starting a fire. Remember that welding sparks and hot materials from welding can easily go through small cracks and openings to adjacent areas. Avoid welding near hydraulic lines. Have a fire extinguisher readily available.

6.b. Where compressed gases are to be used at the job site, special precautions should be used to prevent hazardous situations. Refer to “Safety in Welding and Cutting” (ANSI Standard Z49.1) and the operating information for the equipment being used.

6.c. When not welding, make certain no part of the electrode circuit is touching the work or ground. Accidental contact can cause overheating and create a fire hazard.

6.d. Do not heat, cut or weld tanks, drums or containers until the proper steps have been taken to insure that such procedures will not cause flammable or toxic vapors from substances inside. They can cause an explosion even though they have been “cleaned”. For information, purchase “Recommended Safe Practices for the Preparation for Welding and Cutting of Containers and Piping That Have Held Hazardous Substances”, AWS F4.1 from the American Welding Society (see address above).

6.e. Vent hollow castings or containers before heating, cutting or welding. They may explode.

6.f. Sparks and spatter are thrown from the welding arc. Wear oil free protective garments such as leather gloves, heavy shirt, cuffless trousers, high shoes and a cap over your hair. Wear ear plugs when welding out of position or in confined places. Always wear safety glasses with side shields when in a welding area.

6.g. Connect the work cable to the work as close to the welding area as practical. Work cables connected to the building framework or other locations away from the welding area increase the possibility of the welding current passing through lifting chains, crane cables or other alternate circuits. This can create fire hazards or overheat lifting chains or cables until they fail.

6.h. Also see item 1.c.

6.I. Read and follow NFPA 51B “ Standard for Fire Prevention During Welding, Cutting and Other Hot Work”, available from NFPA, 1 Batterymarch Park, PO box 9101, Quincy, Ma 022690-9101.

6.j. Do not use a welding power source for pipe thawing.

CYLINDER may explode if damaged.

7.a. Use only compressed gas cylinders containing the correct shielding gas for the process used and properly operating regulators designed for the gas and pressure used. All hoses, fittings, etc. should be suitable for the application and maintained in good condition.

7.b. Always keep cylinders in an upright position securely chained to an undercarriage or fixed support.

7.c. Cylinders should be located:

- Away from areas where they may be struck or subjected to physical damage.
- A safe distance from arc welding or cutting operations and any other source of heat, sparks, or flame.

7.d. Never allow the electrode, electrode holder or any other electrically “hot” parts to touch a cylinder.

7.e. Keep your head and face away from the cylinder valve outlet when opening the cylinder valve.

7.f. Valve protection caps should always be in place and hand tight except when the cylinder is in use or connected for use.

7.g. Read and follow the instructions on compressed gas cylinders, associated equipment, and CGA publication P-I, “Precautions for Safe Handling of Compressed Gases in Cylinders,” available from the Compressed Gas Association 1235 Jefferson Davis Highway, Arlington, VA 22202.

FOR ELECTRICALLY powered equipment.

8.a. Turn off input power using the disconnect switch at the fuse box before working on the equipment.

8.b. Install equipment in accordance with the U.S. National Electrical Code, all local codes and the manufacturer’s recommendations.

8.c. Ground the equipment in accordance with the U.S. National Electrical Code and the manufacturer’s recommendations.

Refer to **http://www.lincolnelectric.com/safety** for additional safety information.

PRÉCAUTIONS DE SÛRETÉ

Pour votre propre protection lire et observer toutes les instructions et les précautions de sûreté specifiques qui parraissent dans ce manuel aussi bien que les précautions de sûreté générales suivantes:

Sûreté Pour Soudage A L'Arc

1. Protegez-vous contre la secousse électrique:

   a. Les circuits à l'électrode et à la piéce sont sous tension quand la machine à souder est en marche. Eviter toujours tout contact entre les parties sous tension et la peau nue ou les vétements mouillés. Porter des gants secs et sans trous pour isoler les mains.
   b. Faire trés attention de bien s'isoler de la masse quand on soude dans des endroits humides, ou sur un plancher metallique ou des grilles metalliques, principalement dans les positions assis ou couché pour lesquelles une grande partie du corps peut être en contact avec la masse.
   c. Maintenir le porte-électrode, la pince de masse, le câble de soudage et la machine à souder en bon et sûr état defonctionnement.
   d. Ne jamais plonger le porte-électrode dans l'eau pour le refroidir.
   e. Ne jamais toucher simultanément les parties sous tension des porte-électrodes connectés à deux machines à souder parce que la tension entre les deux pinces peut être le total de la tension à vide des deux machines.
   f. Si on utilise la machine à souder comme une source de courant pour soudage semi-automatique, ces precautions pour le porte-électrode s'applicuent aussi au pistolet de soudage.

2. Dans le cas de travail au dessus du niveau du sol, se protéger contre les chutes dans le cas ou on recoit un choc. Ne jamais enrouler le câble-électrode autour de n'importe quelle partie du corps.

3. Un coup d'arc peut être plus sévère qu'un coup de soliel, donc:

   a. Utiliser un bon masque avec un verre filtrant approprié ainsi qu'un verre blanc afin de se protéger les yeux du rayonnement de l'arc et des projections quand on soude ou quand on regarde l'arc.
   b. Porter des vêtements convenables afin de protéger la peau de soudeur et des aides contre le rayonnement de l'arc.
   c. Protéger l'autre personnel travaillant à proximité au soudage à l'aide d'écrans appropriés et non-inflammables.

4. Des gouttes de laitier en fusion sont émises de l'arc de soudage. Se protéger avec des vêtements de protection libres de l'huile, tels que les gants en cuir, chemise épaisse, pantalons sans revers, et chaussures montantes.

5. Toujours porter des lunettes de sécurité dans la zone de soudage. Utiliser des lunettes avec écrans lateraux dans les zones où l'on pique le laitier.

6. Eloigner les matériaux inflammables ou les recouvrir afin de prévenir tout risque d'incendie dû aux étincelles.

7. Quand on ne soude pas, poser la pince à une endroit isolé de la masse. Un court-circuit accidental peut provoquer un échauffement et un risque d'incendie.

8. S'assurer que la masse est connectée le plus prés possible de la zone de travail qu'il est pratique de le faire. Si on place la masse sur la charpente de la construction ou d'autres endroits éloignés de la zone de travail, on augmente le risque de voir passer le courant de soudage par les chaines de levage, câbles de grue, ou autres circuits. Cela peut provoquer des risques d'incendie ou d'echauffement des chaines et des câbles jusqu'à ce qu'ils se rompent.

9. Assurer une ventilation suffisante dans la zone de soudage. Ceci est particuliérement important pour le soudage de tôles galvanisées plombées, ou cadmiées ou tout autre métal qui produit des fumeés toxiques.

10. Ne pas souder en présence de vapeurs de chlore provenant d'opérations de dégraissage, nettoyage ou pistolage. La chaleur ou les rayons de l'arc peuvent réagir avec les vapeurs du solvant pour produire du phosgéne (gas fortement toxique) ou autres produits irritants.

11. Pour obtenir de plus amples renseignements sur la sûreté, voir le code "Code for safety in welding and cutting" CSA Standard W 117.2-1974.

PRÉCAUTIONS DE SÛRETÉ POUR LES MACHINES À SOUDER À TRANSFORMATEUR ET À REDRESSEUR

1. Relier à la terre le chassis du poste conformement au code de l'électricité et aux recommendations du fabricant. Le dispositif de montage ou la piece à souder doit être branché à une bonne mise à la terre.

2. Autant que possible, l'installation et l'entretien du poste seront effectués par un électricien qualifié.

3. Avant de faires des travaux à l'interieur de poste, la debrancher à l'interrupteur à la boite de fusibles.

4. Garder tous les couvercles et dispositifs de sûreté à leur place.

NOTES

SEC. K1 — INDEX

Sec. K2 — Sequence of Installation

Mechanical Installation

1a. Install the wire feed unit and wire reel mounting at the work station (except LN-8F) ..... Sec. K2.2.1
1b. Install the LN-8F on the boom or fixture ..... Sec. K2.2.2
2. Install the wire feed rolls for the wire size to be used ..... Sec. K2.2.3
3. Install the gun and cable assembly ..... Sec. K2.2.4
4. Connect the continuous flux feed tank (submerged arc welding only) ..... Sec. K2.2.6
5. Install the LN-8N or LN-8S input cable to the wire feed unit ..... Sec. K2.2.9
6. Install the LN-8NE or LN-8SE input cable and extension cables ..... Sec. K2.2.10

Electrical Installation

7. Install the power source where desired and connect it to input power lines per the operating manual shipped with the power source.
8. Check whether a constant voltage or variable voltage power source is to be used ..... Sec. K2.3.1
9. Connect the input cable to the power source. Set the wire feeder and power source for constant or variable voltage as appropriate ..... Sec. K2.3.2
10. Use the appropriate connection diagram for the power source being used ..... Sec. K2.3.3

Optional Feature Installation

K261 & K262 Wire Feed Speed-Voltmeter Kits ..... Sec. K2.5.1
K165 Ammeter-Voltmeter Kit ..... Sec. K2.5.2
K207 Wire Feed Speed Meter-Voltmeter Kit ..... Sec. K2.5.3
Auxiliary Equipment Contacts ..... Sec. K2.5.4
Squirtmobile® ..... Sec. K2.5.5
K161 Mechanized Travel Power Pack (For K110 or Squirtmobile with K114 Submerged Arc Gun) ..... Sec. K2.5.6
K202 Contactor Dropout Delay Kit (For Squirtmobile and/or Electrode Overrun) ..... Sec. K2.5.7
K178 Mounting Platform — LN-8 on Idealarc® R3S ..... Sec. K2.5.8
10 and 25 lb. (4.5 and 11 Kg) Spool Spindle ..... Sec. K2.5.9
Wire Reel Enclosure Door ..... Sec. K2.5.10
Undercarriage (LN-8N or LN-8NE) ..... Sec. K2.5.12
K200 Portable Field Control (With SAF-600, SA-800 or SAN Only) ..... Sec. K2.5.13
Variable Voltage Conversion Parts ..... Sec. K2.5.14
K224 Solid-State Field Control (With SAF-600, SA-800 or SAN Only) ..... Sec. K2.5.15
K317 Dual Process Kit (no polarity change) ..... Sec. K2.5.16
K318 Dual Process Contactor Kit (with polarity change) ..... Sec. K2.5.17

Sec. K3 — Operating Instructions

Control Adjustments and Loading the Machine

Introduction ..... Sec. K3.1.1
Welding with a Constant Voltage Power Source ..... Sec. K3.1.2
Welding with a Constant Current Power Source ..... Sec. K3.1.3
Linc-Fill™ Long Stickout Welding ..... Sec. K3.1.4
Wire Reel Loading ..... Sec. K3.1.8
Flux Tank Loading ..... Sec. K3.1.10

For Innershield operating techniques and procedures request "Innershield Production Welding Guide," Bulletin N675.

Sec. K3 — Operating Instructions (cont'd)

Making Submerged Arc Welds
Gun Operating Positions: Squirtgun K114 ..... Sec. K3.2.3
Fillet Guide (Optional): K70 ..... Sec. K3.2.4

For additional submerged arc operating techniques request "How to Make Submerged Arc Welds," Bulletin S604.

Sec. K6 — Maintenance

Wire Drive and Controls
Drive Rolls and Guide Tubes ..... Sec. K6.1.1
Wire Drive Motor and Gear Box ..... Sec. K6.1.2
Wire Reel Assembly ..... Sec. K6.1.3
Control Box ..... Sec. K6.1.4
Circuit Protection ..... Sec. K6.1.5

Gun Cable, Gun and Hand Travel Kit
Gun Cable ..... Sec. K6.2.1
Gun Disassembly (Innershield Squirtguns K115 & K126 and Submerged Arc Squirtguns K112 & K113) ..... Sec. K6.2.2
Gun Disassembly (Innershield Squirtgun K116) ..... Sec. K6.2.3
Gun Nozzle (All) ..... Sec. K6.2.4
Gun Disassembly (Submerged Arc Squirtgun K114) ..... Sec. K6.2.5
Hand Travel Kit (K110) ..... Sec. K6.2.6

Flux Feeding System ..... Sec. K6.3.1
Troubleshooting ..... Sec. K6.4
Electrical Sequence of Operations ..... Sec. K6.7

Sec. K7 — Parts Lists

Index ..... Sec. K7.1

Wiring Diagrams ..... Filed at back of this manual

SEC. K2.2 — MECHANICAL INSTALLATION

Sec. K2.2.1
Wire Feed Unit and Wire Reel

1. **LN-8N** wire feed unit and wire reel mount are shipped separately. To connect:
   a. Remove the three 3/8" (9.5 mm) screws from the back of the wire drive unit.
   b. Place the wire reel mounting bracket in position against the back of the wire drive unit.
   c. Replace and tighten the screws. The long screw goes into the top hole.

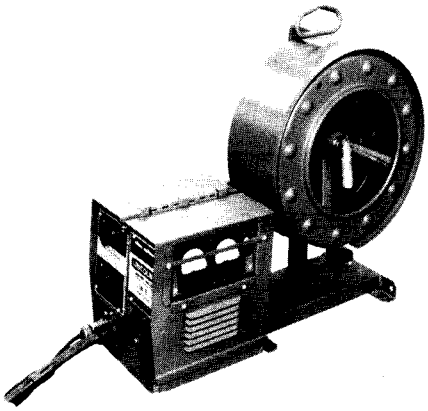

LN-8N (Meters Optional)

2. **LN-8NE** wire feed unit, wire reel with hand crank, and extension cables are shipped separately. Install per Sec. K2.2.10.

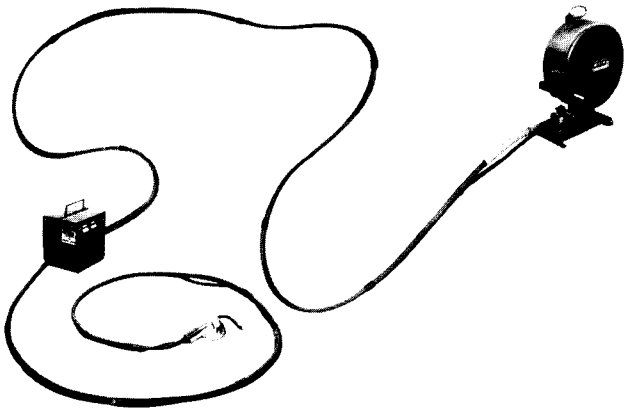

To convert LN-8N to LN-8NE order the appropriate equipment indicated in the photo above.

3. **LN-8F** is designed for mounting on a boom or other fixture as appropriate to the installation. It consists only of a wire feed unit, a control box and a 15' (4.5 m) extension cable assembly to join the two units. See Sec. K2.2.2 for installation instructions.

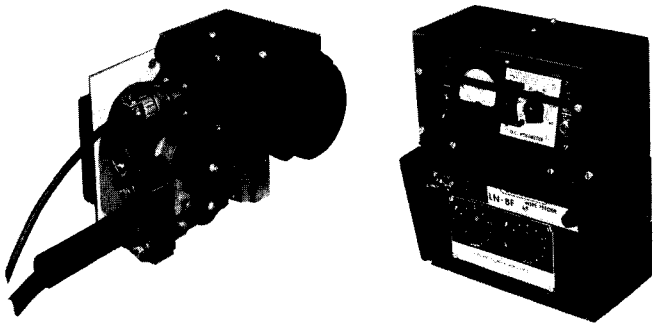

LN-8F (Meters Optional)

4. **LN-8S** is shipped with the wire reel mount and flux tank installed on the undercarriage. See Sec. K2.2.1 for mounting the wire feed unit to the wire reel. The four basic sections — wire feed unit, flux tank, reel mount, and undercarriage — can be separated and mounted where most convenient for specific application needs.

LN-8S (Meters Optional)

Sec. K2.2.1(Continued)

5. **LN-8SE** is shipped with the wire reel mount (including door and hand crank), and flux tank installed on the undercarriage. Bolt the handle to the front of the undercarriage base.

   Place the wire feed unit near the welding location and install the extension cable per Sec. K2.2.10.

   The wire reel mount and flux tank can be removed from the undercarriage and located where convenient for a specific installation.

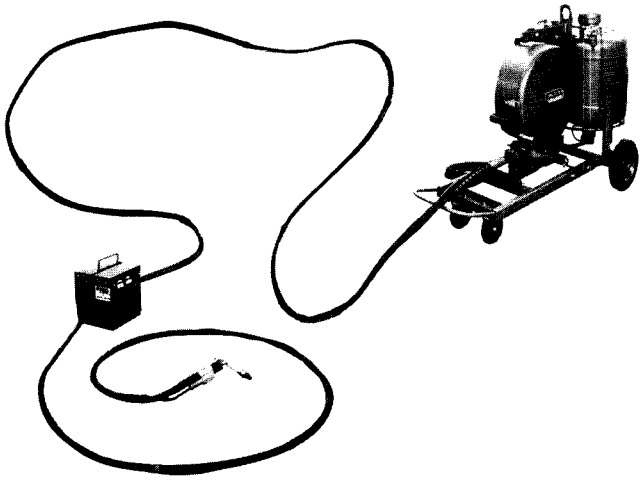

LN-8SE (Meters Optional)

November 1990

Sec. K2.2.2

LN-8F Installation

1. **Wire Feed Unit**
   Install the wire feed unit in the desired location using the mounting plate attached to the gear box. See the dimension drawing included in this manual for hole location and size. Since the wire feed unit is at welding potential when welding, **be certain there is no electrical contact** between the gear box and the structure on which it is mounted.

   Locate the unit so the drive rolls are in the vertical plane to minimize dirt accumulation around the rolls. Also position the unit so the electrode feed cable points down at about a 45° angle to avoid a sharp bend in the gun cable where connected to the wire drive mechanism.

2. **Control Box**
   a. Place the control box in a convenient location close enough to the wire drive unit that the 15' (4.5 m) extension cable assembly will reach between them.
   b. The control box includes two keyhole slots as indicated in the dimension drawing included in this manual. Drill the required matching holes in the mounting surface.
   c. Install two 1/4-20 screws but do not tighten.
   d. Remove the L-shaped cover from the top and upper front of the control box.
   e. Mount the control box and tighten the screws.

3. **Extension Cable**
   The extension cable between the wire feed unit and the control box consists of a multiconductor control cable and an electrode cable. Insert the right-angled polarized connector on the control cable into the mating receptacle on the wire feed unit. If more convenient for the installation, this receptacle can be rotated 180° by removing the four mounting screws, rotating the receptacle and replacing the screws. Feed the other end of the control cable thru the cable clamp on the control box and connect the leads to the like number terminals on the terminal strip. Tighten the cable clamp. Connect the electrode cable to the *front* brass block on the wire feed unit. Connect the other end to the left side of the shunt* at the LN-8F control box.

4. **Input Cable**
   The input cable consists of a multicolor control cable and an electrode cable. Insert the polarized connector on one end of the control cable into the matching connector on the LN-8F control box. Bolt the electrode cable to the right side of the shunt* at the LN-8F control box. Replace the cover.

** Old LN-8F controls below code 7575 have no shunt. Bolt electrode cables from the extension and input cables together and insulate with electricians tape.*

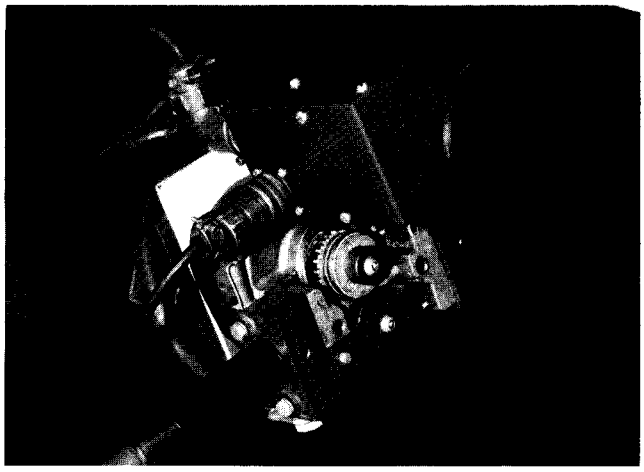

Boom mounted LN-8F Wire Feed Unit

5. **Electrode Routing**
   The LN-8F wire reel mounting and the system of routing the electrode to the wire feed mechanism must be engineered by the fixture designer to fit the requirements of the specific installation. When designing this system, minimize bends in the wire and the force required to pull the electrode from the reel. Pulling the electrode through a tube may cause the electrode to spiral as it leaves the gun. For best results, use eyelets spaced far enough away

SEC. K2.2 — MECHANICAL INSTALLATION (CONTINUED)

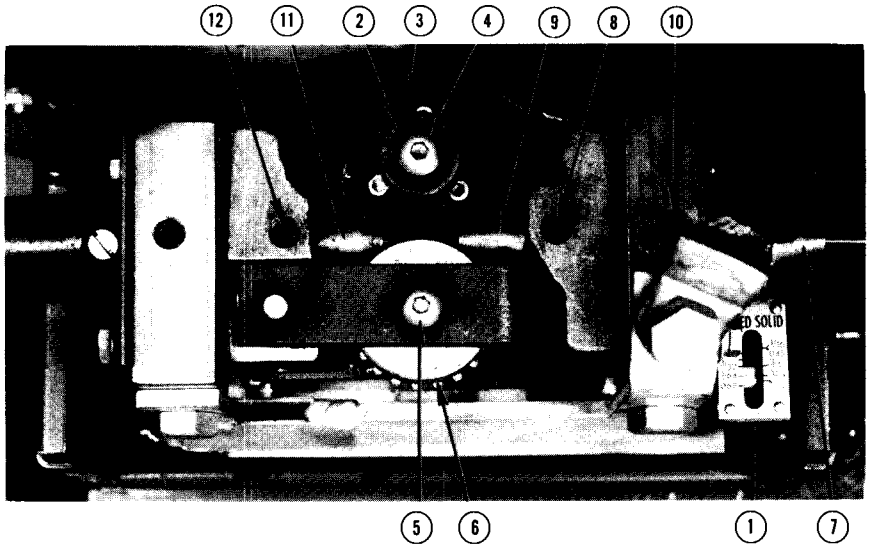

Wire Feed Mechanism set for 3/32" (2.4 mm) electrode diameter.

Sec. K2.2.2 (Continued)

from the beam and far enough apart to let the wire spiral naturally as it goes into the ingoing guide of the wire drive mechanism. **CAUTION**: Since the electrode is at welding potential when welding, the wire and reel mounting *must be insulated* from the boom or fixture.

November 1990

Sec. K2.2.3

Wire Feed Rolls and Guide Tube Kits

WARNING: Turn off power source before installing or changing drive roll and/or guide tubes.

The drive rolls and guide tube kits are ordered separately. Install these parts per the following instructions:

1. Loosen idle roll spring pressure screw (1).
2. Remove clamping collar (2) from the drive shaft.
3. Install drive roll (3) and replace clamping collar (2). Tighten screw (4).
4. Remove idle roll shaft screw (5) — install idle roll (6). Replace screw and tighten.
5. Remove the large ingoing guide (7) from rear brass block by loosening screw (10).
6. Loosen the ingoing guide tube clamping screw (8). Install the guide tube (9) which is stenciled "in" through the rear brass block. Tighten the locking screw.
7. Replace the large ingoing guide (7) tube into the rear brass block. Tighten the locking screw (10).
8. Install the outgoing guide tube (11) with its plastic insert through the front brass block. Tighten the locking screw (12), so the dog point goes into the groove in the O.D. of the guide tube.
9. Setting the Drive Roll Spring Pressure.
   a. For wire sizes from .030 thru .052 (.8 thru 1.3 mm) — with wire in the system, the idle roll pressure indicator should be set to the proper wire size shown on the "solid" side of the nameplate. (For .030 (.8 mm) solid wire, set the pressure indicator slightly less than the .035 (.9 mm) marking.) This setting is a starting point and may have to be changed depending upon type of wire, surface condition, lubrication and hardness. The optimum idle roll setting can be determined when there are wire stoppages. If the wire "bird nests" between the drive roll and the guide tube, the idle roll spring pressure is too high. When properly set, during a stoppage the drive rolls will slip and if the electrode is removed from the cable, there will be a slight waviness in the electrode for about a foot beyond the slip marks on the electrode. If there is no waviness, the pressure is set too low.
   b. For 1/16 solid or .062 (1.6 mm) cored wire (use the "1/16" drive roll) — The idle roll pressure should be set with wire in the system. For 1/16 (1.6 mm) solid wire, the indicator should be lined up with the "solid" 1/16 mark. For **.062 (1.6 mm) cored** wire, adjust the idle roll pressure so that the indicator is lined up with the **"cored" 3/32 (2.4 mm)** mark.

      These indicator settings are accurate enough so that there is no need to readjust unless the electrode is unusually soft.
   c. For wire sizes from .068 through .120 (1.7 thru 3.0 mm) — idle roll pressure should be set with wire in the system. For solid wire, the indicator should be lined up with the "solid" wire settings. For cored wire, the indicator should be lined up with the "cored" wire settings. When using 7/64 (2.8 mm) diameter 'Innershield' wire, adjust the idle roll pressure so that the indicator is between the .120 and 3/32 (3.0 and 2.4 mm) setting.

Sec. K2.2.3 (Continued)

The indicator settings for these larger wire sizes are accurate enough so that there is no need to readjust, unless the electrode is unusually soft.

The drive rolls are stamped with the wire size for which they are designed. If a wire size is used that is not stamped on the drive roll, the drive rolls and guide tubes will have to be changed.

August 1996

Sec. K2.2.4

Gun and Gun Cable

1. **Gun Handling Procedures to Avoid Wire Feeding Problems**
   a. Do not kink or pull cable around sharp corners.
   b. Keep the electrode cable straight as practical when welding or starting the electrode through cable.
   c. Do not allow dolly wheels or trucks to run over cables.
   d. Keep cable clean by following maintenance instructions.
   e. Use only clean rust-free electrode.
   f. Replace contact tip when the arc starts to become unstable or the contact tip end is fused or deformed.
2. **General**
   The LN-8 is used with various guns. In all cases the gun is shipped connected to the cable ready-to-weld. Use the gun recommended for the wire type (solid or cored) and size to be used.
   Note: The guns described below were available at the time this sheet was printed. They may not be today. See Lincoln Specification literature for up-to-date information.
3. **Gun Cable: LN-8 to Gun**
   Lay the cable out straight. Insert the male end of the welding conductor cable into the brass block on the front of the LN-8. Make sure it is in all the way and tighten the locking screw with a 3/16" (4.8mm) Allen wrench. Keep this connection clean and bright. Connect the control cable polarized plug into the receptacle next to the coupling.
4. **Submerged Arc Guns**
   For 1/16" (1.6 mm) wire, use Squirtgun K112
   For 5/64" (2.0 mm) wire, use Squirtgun K113-5/64
   For 3/32" (2.4 mm) wire, use Squirtgun K114 (also can be used for 5/64" (2.0 mm) wire) or K113-3/32. The K114 is designed for use only with the continuous flux feed system.

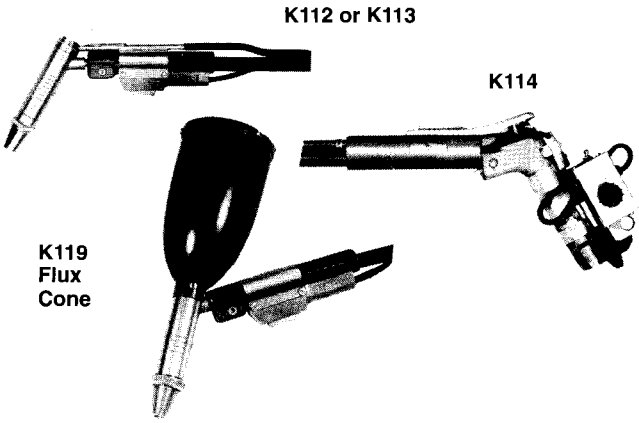

   If the flux tank is not used with the K112 and K113 guns, attach the optional gravity feed flux cone (K119) to the gun with the screws provided. The cone also includes a new clamp to be used to hold the trigger pod to the gun. Use it in place of the clamp shipped with the gun.
5. **Innershield® Guns**
   Squirtgun K126 is recommended for most welding with .062 through 3/32" (1.6 through 2.4 mm) wire. Install insulated nozzle extension (or thread protector) and the nozzle contact tip for the stickout and wire size being used.

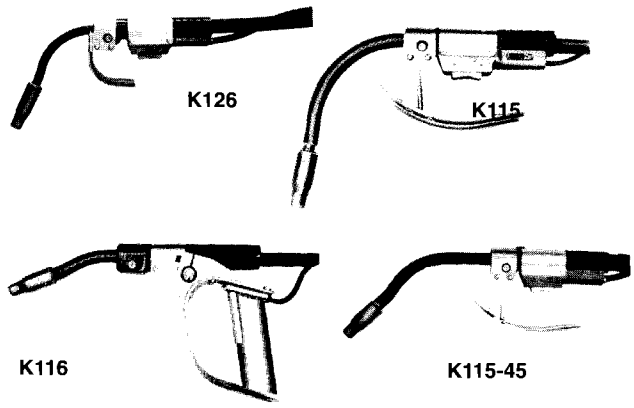

   For heavy duty welding with 3/32" (2.4 mm) wire use either Squirtgun K115-3/32, K115-45-3/32 or K116-3/32. K116 has an adjustable handle and is used for higher welding currents. K115 is lighter. Install 3/32" (2.4mm) contact tip and the insulated nozzle extension for the stickout being used.

   For welding with 7/64" and .120" (2.8 and 3.0 mm) wire, use K115-.120, K115-45-.120 or K116-.120. Install the insulated nozzle extension and the contact tip for the stickout and wire size being used.
6. **Linconditioner™ Guns**
   For locations where smoke accumulation is a problem and conventional exhaust systems are ineffective, the available smoke removal type Innershield guns and vacuum units can be used. Instructions are shipped with the equipment.
7. **Magnum™ Guns**
   Magnum 300 and 400 represent a line of gas shielded welding guns utilizing a new handle design. The new handle is ergonomically styled combining form and function. The guns, cables and connectors provide excellent performance and serviceability. Magnum guns are capable of welding with either solid or flux cored wire electrode using the GMAW (Gas Metal Arc Welding) or FCAW-GS (Gas Shielded Flux Cored Arc Welding) processes. For wire sizes .035" through 5/64" (0.9 through 2.0 mm) see bulletin E893 for more details.

SEC. K2.2 — MECHANICAL INSTALLATION (CONTINUED)

Sec. K2.2.4 (Continued)

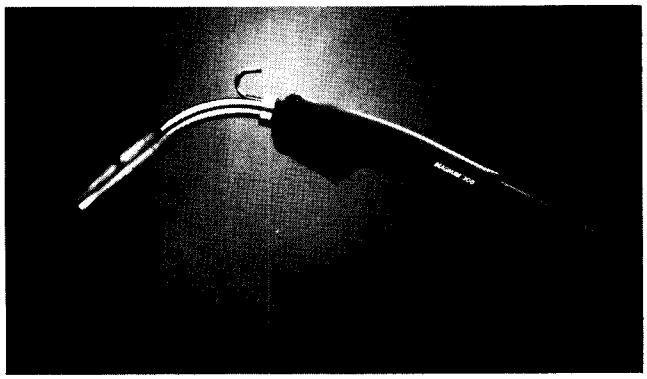

November 1990

Sec. K2.2.6
LN-8S and LN-8SE Continuous Flux Feed (Submerged Arc)

1. **Flux Hose**
   Connect the loose end of the hose to the tube at the back end of the welding gun. Tighten the hose clamp. If the hose is taped to the gun cable, be sure it is not collapsed or deformed because this could cause flux feeding problems.
2. **Input Air Connection**
   (See S14121 for installation of K320 Flux Tank to wire feeder with K163 undercarriage.)

   The air for the automatic flux feeding system is obtained from the regular plant compressed air system providing the plant system pressure is between 60 and 120 psi (414 and 827 kPa). The tank is equipped with a pressure regulator to reduce the input pressure to the 30 psi (207 kPa) required for the flux feeding system. This pressure is set at the factory before the machine is shipped. When the LN-8SE with the 22-1/2 or 45' (6.9 or 13.7 m) extension is used, and the flux hose is long, set the air pressure at 45 psi (310 kPa) for 1/2" (12 mm) I.D. hose and 55 psi (379 kPa) for 3/8" (9.5 mm) I.D. hose. Exact pressure is indicated on the pressure gage. Air consumption is normally less than 1.5 cubic feet per minute of welding.

   Connect the input air hose to the street elbow located at the right side of the flux tank. A quick disconnect connector should be installed between the elbow and the input hose.

   The tank air system is equipped with a water and dirt separator. Water separated from the input air feeds down through the long flux filled tube located at the input connection. It is exhausted from the system through the coiled tube below the flux tank. There is always a small amount of air and possibly water coming out of the end of this tube.

November 1990

Sec. K2.2.9
LN-8N and LN-8S Input Cable Installation

The input cable consists of an electrode cable and multiconductor control cable. The control cable has a polarized plug on the wire feeder end. To install:

1. Connect the polarized plug of the control cable to the mating connector on the back of the wire feeder.
2. Remove the screws holding the cable clamp located near the rear of the wire reel base. Put the control cable and the electrode cable under the clamp and install the screws. (On cables with more than one electrode cable, leave the junction between the two or more cables and the single 4/0 stub behind the clamp so only the single electrode lead is under the clamp.
3. Pass the single electrode cable through the holes provided in the back corner of the control section and fasten it to the tab on the copper conductor above the rear brass block of the wire drive unit.

(See Sec. K2.2.2 for LN-8F input cable connector instructions.)

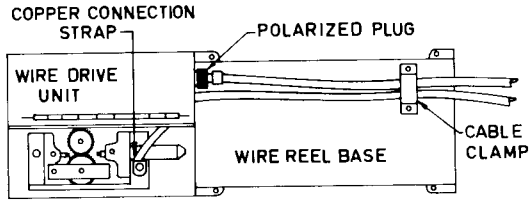

September 1979

Sec. K2.2.10
LN-8NE and LN-8SE Input Cable, Extension Cable and Reel Housing Installation.

The extension unit consists of a wire reel mount with a hand crank and either a 22-1/2 or 45' (6.9 or 13.7 m) extension cable assembly. The cable is rated at 450 amps, 50% duty cycle. For higher currents install a parallel length of 1/0 cable per paragraph 10. The extension cable can be used for .068 thru .120" (1.7 thru 3.0 mm) flux-cored electrode and 5/64 thru 3/32" (2.0 thru 2.4 mm) solid electrode. 22-1/2' (6.9 m) cables can also be used for 1/16" (1.6 mm) solid electrodes.

1. When shipped, the hand crank on the wire reel mount is equipped to feed 1/16" — .120" (1.6 — 3.0 mm) electrode.
2. The standard input cable consists of an electrode cable and a control cable with a polarized plug on the wire feeder end. Position the input cable with the polarized plug at the wire reel mount.
3. Connect the electrode cable of the input cable to the brass block on the hand crank assembly using the screw provided.
4. Position the 22-1/2' or 45' (6.9 or 13.7 m) extension cable assembly so the polarized connector with the threads on its O.D. is at the wire reel mount.

Sec. K2.2.10 (Continued)

5. Connect the polarized connectors of the extension cable and input cable together.
6. Place both control and electrode cables of the input cable assembly under the clamp on the wire reel mount and tighten the screws.
7. Insert the connector on the electrode cable of the extension assembly into the brass block of the hand crank assembly and tighten with a 3/16" (4.8 mm) Allen wrench.
8. At the wire drive unit, connect the polarized plug of the extension control cable into the mating receptacle on the back of the wire drive unit.
9. Remove the ingoing guide tube from the rear brass block of the wire drive unit and plug the connector of the conductor cable into the brass block. Tighten the locking screw with a 3/16" (4.8 mm) Allen wrench. The guide tube removed is not used when the extension assembly is installed.

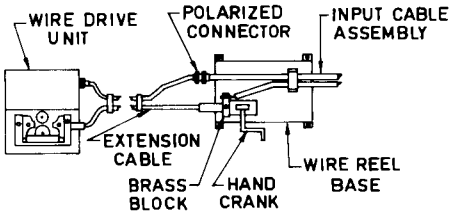

10. If using over 450 amperes, connect a length of 1/0 cable between the brass block on the wire reel housing and copper strap on the rear brass block of the wire drive unit. Tape this cable to the extension assembly. Proper cable lengths are as follows:
    22-1/2' (6.9 m) extension use 23-1/2' (7.2 m) — order M5906-106
    45' (13.7 m) extension use 46' (14 m) — order M5906-104
11. To mount the wire drive unit handle provided with the extension unit, remove the two self tapping screws that hold the hinge pin in the top of the wire feed unit. Push the hinge pin out leaving the covers intact. Place the handles into the slots provided, push the hinge pin back into the assembly making sure the pin goes through the holes in the handle. Put the two self tapping screws back into the respective positions.
12. If the extension is being used with a K306 Wire Reel Flux Tank assembly, the hose attached to the bottom of the flux tank may have to be shortened. This hose is 64 feet (19.5 m) long and is the correct length for use with the 45 foot (13.7 m) extension. If a 22-1/2 foot (6.9 m) extension is to be used, cut off 22-1/2 feet (6.9 m) of the flux hose to give the correct length of 41-1/2 feet (12.6 m). (The conductor cable of the extension assembly is 22-1/2 feet (6.9 m) long, tip to tip, and can be used to measure the length cut off.) If the flux hose is taped to the extension cables or the gun cable, it should be done in such a manner as not to deform or collapse the flux hose.

SEC. K2.3 — ELECTRICAL INSTALLATION

WARNING: Turn the power source off when installing the wire feeder.

⚠ WARNING

ELECTRIC SHOCK can kill.	• Do not touch electrically live parts or electrode with skin or wet clothing. • Always wear dry insulating gloves. • Insulate yourself from work and ground.
FUMES AND GASES can be dangerous.	• Keep your head out of fumes. • Use ventilation or exhaust to remove fumes from breathing zone.
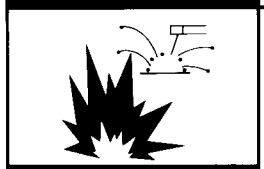 **WELDING SPARKS can cause fire or explosion.**	• Keep flammable material away. • Do not weld upon containers which have held combustibles.
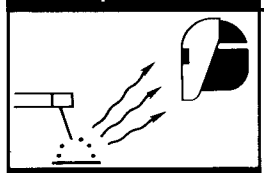 **ARC RAYS can burn.**	• Wear eye, ear and body protection.

Sec. K2.3.1

Constant Voltage or Constant Current

Use the type of power source required for the specific welding application.

A **constant voltage** power source is required for Innershield electrode and other open arc welding. It is often preferred for small, single pass submerged arc welds at fast travel speeds.

In the past a **constant current** power source was recommended for most submerged arc welding.

CV Submerged Arc — With the innovation of the new DC power sources a special mode, ("CV Sub-Arc") is available and is preferred for most sub-arc welding.

When shipped, the LN-8N, LN-8NE and LN-8F can *only* be used with a constant voltage power source. These models can be converted to weld with a constant current power source with installation of the proper parts. (See Sec. K2.5.14.)

When shipped, the LN-8S and LN-8SE welds with either a constant voltage or constant current power source. Be sure both the power source and the wire feeder are properly set for the required procedure. (See Sec. K2.3.2.)

November 1990

Sec. K2.3.2.

Connection of Input Cable to Power Source

LN-8N, LN-8NE and LN-8F

Use a constant voltage type power source. (If the LN-8 has been converted to weld with a constant current power source, use the instructions for the LN-8S below.)

1. If using a multipurpose power source (DC-600, SAM, SA-800, SAF-600), be sure it is properly set for constant voltage welding per instructions in the power source operating manual.

2a. Connect the LN-8 input cable to the power source exactly as specified on the appropriate connection diagram in Sec. K2.3.3. Include all jumpers on the terminal strips as shown on the diagrams.

2b. To connect to Lincoln power sources not equipped with an output contactor, order a K240 Contactor Kit and see S15416 connection diagram in Sec. K2.3.4-A.

2c. To connect to power sources equipped with a contactor but not included in Sec. K2.3.3, see K2.3.4-B for connection instructions.

3. Connect a work lead of sufficient size and length (per the table on the next page) between the "To Work" stud on the power source and the work. Be sure the connection to the work makes tight metal-to-metal contact.

LN-8S and LN-8SE (Or converted LN-8N, LN-8NE or LN-8F)

1. Use either a constant voltage or constant current type power source as required for the application. Be sure the power source is properly set for constant voltage or constant current welding as appropriate per the instructions in the power source operating manual.

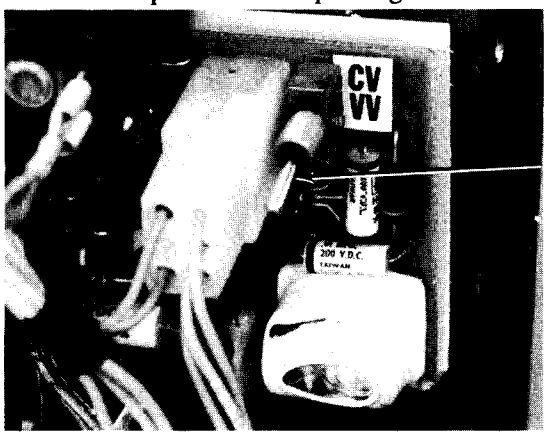

2. Set the wire feeder for a constant voltage or constant current power source as appropriate per the following instructions:
   a. There are two nameplates on the front of the wire feed unit — one mounted on top of the other. Be sure the 'Constant Current Power Source' (formerly Variable Voltage) nameplate is on top when using a constant current power source. When connected to a constant voltage power source, be sure the 'Constant Voltage Power Source' nameplate is on top.
   b. Turn the power to the wire feeder off. Open the door to the control section and switch the power source selection switch to constant current 'CC' or constant voltage 'CV' as appropriate

3a. Connect the LN-8 input cable to the power source exactly as specified on the wiring diagrams in Sec. K2.3.3. Include all jumpers on the terminal strips as shown on the wiring diagrams.

3b. To connect to Lincoln power sources not equipped with an output contactor, order a K240 Contactor Kit and see S15416 connection diagram in Sec. K2.3.4-A.

3c. To connect to power sources equipped with a contactor but not included in Sec. K2.3.3, see Sec. K2.3.4-B for connection instructions.

4. Connect a work lead of sufficient size and length (per the following table) between the 'To Work' stud on the power source and the work. Be sure the connection to the work makes tight metal-to-metal contact.

Current Amps 60% Duty Cycle	Copper Work Cable Length		
	25' (7.5m)	50' (15m)	100' (45m)
300	0	0	000
400	00	00	0000
500	00	000	0000
600	000	000	Two 000

CAUTION: Never operate a Lincoln Squirt welder wire feeder with a power source that has a jumper from #2 to #4 on the terminal strip or with a power source without a contactor. To do so would defeat the grounding lead protector circuit and could result in overheating of the electrical ground circuit to the wire feeder.

Sec. K2.3.3-A

Connection of LN-8 to an Idealarc® R3S-400, 600 or 800 (with LVC) (Discontinued)

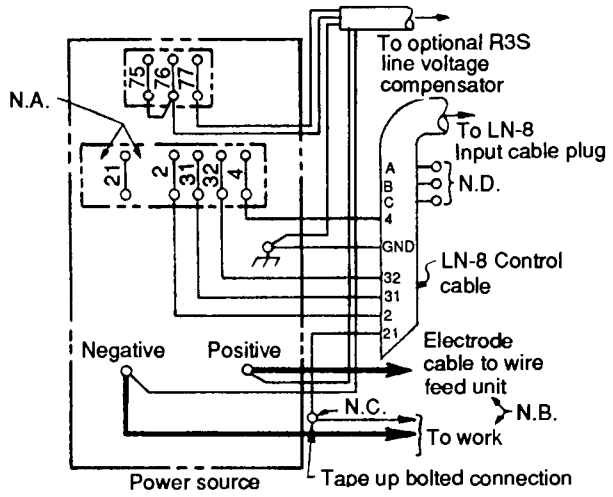

Above diagram shows electrode connected for positive polarity. To change polarity, turn power off, reverse the electrode and work leads at the power source and reverse the "Control Switch" at the power source.

Connect the LN-8 control cable ground lead to the frame terminal marked ⏚ near the power source terminal strip or to an unpainted

N.A. On earlier R3S-400, -600 & -800 machines, #67 & #1 terminals were also on the terminal strip.

N.B. Welding cables must be of proper capacity for the current and duty cycle of immediate and future applications.

N.C. Extend lead 21 using #14 or larger insulated wire physically suitable for the installation. An S16586-[ ] remote voltage sensing work lead is available for this purpose. Connect it directly to the work piece keeping it electrically separate from the welding work lead circuit and connection. For convenience, this extended #21 lead should be taped to the welding work lead. (This extended #21 lead connection replaces the need to employ the remote work lead accessory on LN-8 meter kits which have a direct work lead jack).

N.D. LN-8 leads "A", "B" & "C" are taped up when R3S line voltage compensator is connected. Arc voltage is controlled by the line voltage compensator rheostat. There will be no adjustment of voltage by the LN-8 voltage control. Older LN-8 control cables are tagged #75, #76 and #77 instead of "A", "B" and "C".

⚠ WARNING

ELECTRIC SHOCK can kill.

- **Do not operate with covers removed.**
- **Disconnect welding power source before servicing.**
- **Do not touch electrically live parts.**
- **Only qualified persons should install, use or service this machine.**

S16026
4-20-79

Sec. K2.3.3-B

Connection of LN-8 to an Idealarc R3S-400, 600 or 800 (without LVC) (Discontinued)

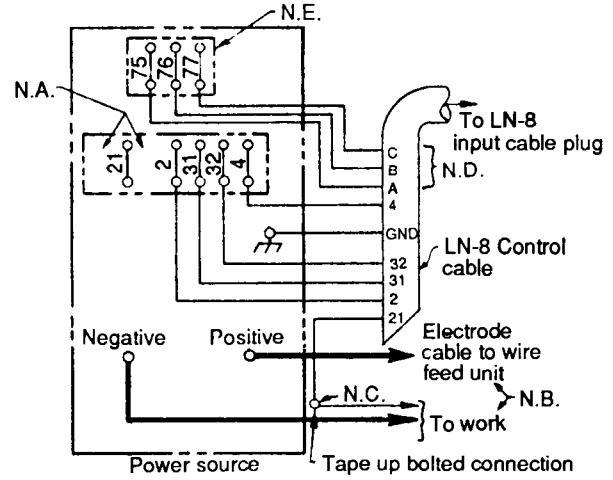

Above diagram shows electrode connected for positive polarity. To change polarity, turn power off, reverse the electrode and work leads at the power source and reverse the "control switch" at the power source.

Connect the LN-8 control cable ground lead to the frame terminal marked ⏚ near the power source terminal strip or to an unpainted frame screw. The power source must be grounded properly.

N.A. On earlier R3S-400, -400, -600 & -800 machines, #67 & #1 terminals were also on the terminal strip.

N.B. Welding cables must be of proper capacity for the current and duty cycle of immediate and future applications.

N.C. Extend lead 21 using #14 or larger insulated wire physically suitable for the installation. An S-16586-[ ] remote voltage sensing work lead is available for this purpose. Connect it directly to the work piece keeping it electrically separate from the welding work lead circuit and connection. For convenience, this extended #21 lead should be taped to the welding work lead. (This extended #21 lead connection replaces the need to employ the remote work lead accessory on LN-8 meter kits which have a direct work lead jack.

N.D. If using an older LN-8 control cable: connect lead #75 to #75 on terminal strip, connect lead #76 to #76 on terminal strip, connect lead #77 to #77 on terminal strip.

N.E. Upper terminal strip (#75, #76 & #77) may not appear on older R3S machines, leads A, B & C should be taped up. There will be no adjustment of voltage by the LN-8 voltage control.

The Lincoln Electric Company
Cleveland, Ohio 44117-1199

Sec. K2.3.3-C
Connection of LN-8 to a SAN Welder

* Older LN-8 control cables are tagged #75, #76 and #77 instead of "A", "B", "C".

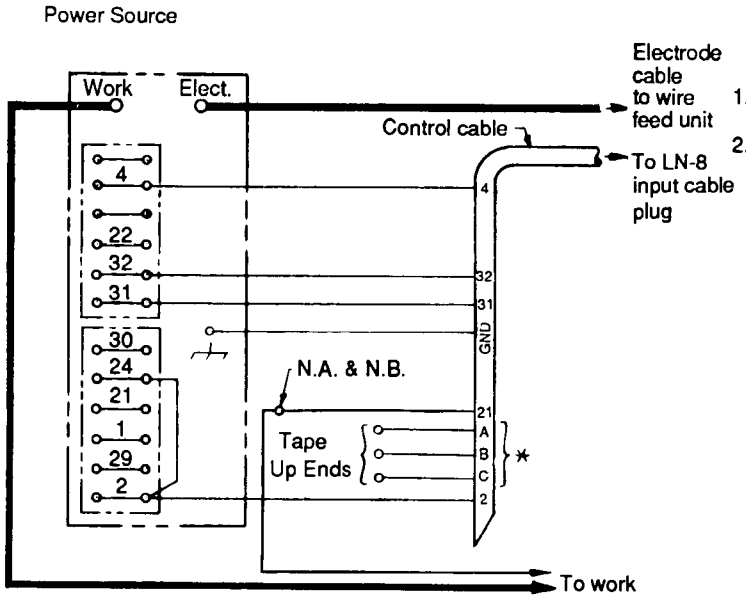

Connect the LN-8 control cable ground lead to the frame terminal marked near the power source terminal strip or to an unpainted frame screw. The power source of course must be properly grounded.

When using optional K200 Portable Field Control:

1. Remove jumper 2-24. Use this lead to jumper 22-32.
2. Connect leads 2 and 24 from the portable field control, to 2 and 24 on the power source terminal strip.

If the portable field control will not be mounted on the LN-8 wire feeder, connect the green lead from the portable field control to the frame of the power source by means of the frame stud near the terminal strip or other secure connection to the power source frame.

If the portable field control is mounted on an LN-8, tape up the green lead from the portable field control.

N.A. Extend lead 21 using #14 or larger insulated wire physically suitable for the installation. An S16586 - [ ] remote voltage sensing work lead is available for this purpose. Connect it directly to the work piece keeping it electrically separate from the welding work lead circuit and connection. For convenience, this extended #21 lead should be taped to the welding work lead. (This extended #21 lead connection replaces the need to employ the remote work lead accessory on LN-8 meter kits which have a direct work lead jack.)

N.B. Tape up bolted connection.

S14609
4-20-79

⚠ WARNING

ELECTRIC SHOCK can kill.

- **Do not operate with covers removed.**
- **Disconnect welding power source before servicing.**
- **Do not touch electrically live parts.**
- **Only qualified persons should install, use or service this machine.**

Sec. K2.3.3-D
Connection of LN-8 to a SAF-600 ("—O" or "—OF"), SA-800 ("—O" or "—OF") or SAF-600-B ("—OA") Welder

* Older LN-8 control cables are tagged #75, #76 and #77 instead of "A", "B" and "C".

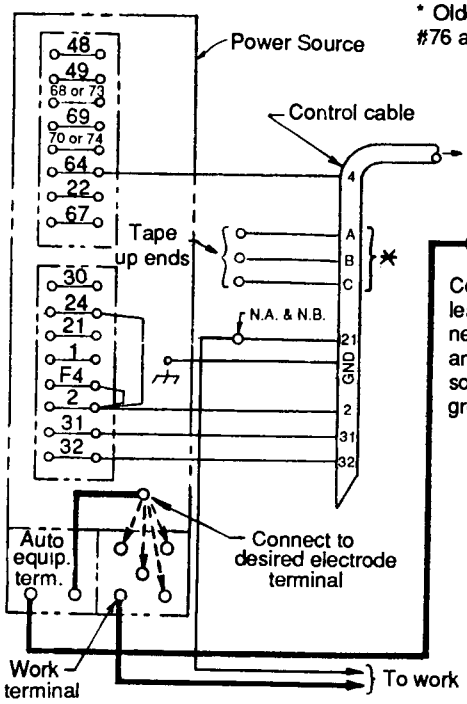

Connect the LN-8 control cable ground lead to the frame terminal marked near the power source terminal strip or to an unpainted frame screw. The power source of course, must be properly grounded.

When using optional K200 Portable Field Control:

1. Remove jumper 2-24. Use this lead to jumper 22-32.
2. Connect leads 2 and 24 from the portable field control, to 2 and 24 on the power source terminal strip.

If the portable field control will not be mounted on the LN-8 wire feeder, connect the green lead from the portable field control to the frame of the power source by means of the frame stud near the terminal strip or other secure connection to the power source frame.

If the portable field control is mounted on an LN-8, tape up the green lead from the portable field control.

N.A. Extend lead 21 using #14 or larger insulated wire physically suitable for the installation. An S16586 - [ ] remote voltage sensing work lead is available for this purpose. Connect it directly to the work piece keeping it electrically separate from the welding work lead circuit and connection. For convenience, this extended #21 lead should be taped to the welding work lead. (This extended #21 lead connection replaces the need to employ the remote work lead accessory on LN-8 meter kits which have a direct work lead jack.)

N.B. Tape up bolted connection.

S14614
4-20-79

Sec. K2.3.3-E

Connection of LN-8 to a SAF-600 ("—O" or "OF") or SA-800 ("—O" or "—OF") Using a K224 Solid-State Field Control

Note: Electrode polarity switches on power source, and field control must be set for same polarity. Power source must be off when changing polarity.

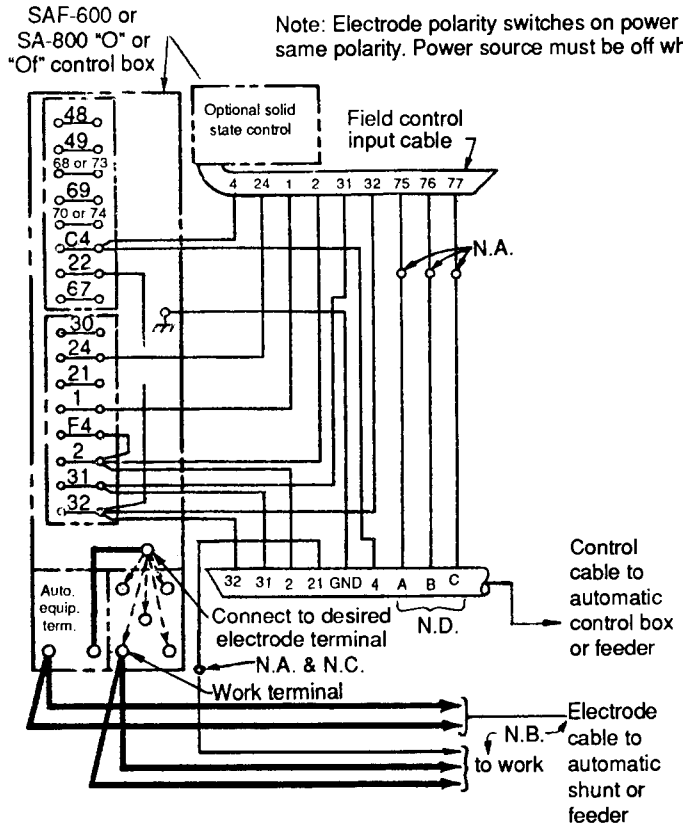

Connect the control cable ground lead to the frame terminal marked ⏚ near the power source terminal strip or to an unpainted frame screw. The power source must be properly grounded.

If optional solid state motor generator field control is not used, tape up separately the A, B & C leads from the control cable. Also connect a jumper from #2-#24 on the power source terminal strip.

N.A. Bolt and tape connection.

N.B. Welding cables must be of proper capacity for the current and duty cycle of immediate and future applications.

N.C. Extend lead 21 using #14 or larger insulated wire physically suitable for the installation. An S16586-[ ] remote voltage sensing work lead is available for this purpose. Connect it directly to the work piece keeping it electrically separate from the welding work lead circuit and connection. For convenience, this extended #21 lead should be taped to the welding work lead. (This extended #21 lead connection replaces the need to employ the remote work lead accessory on LN-8 meter kits which have a direct work lead jack.)

N.D. If using an older control cable: connect lead #75 to lead #75 of field control, connect lead #76 to lead #76 of field control, connect lead #77 to lead #77 of field control.

S15268
1-25-80

Sec. K2.3.3-F

Connection of LN-8 to a SAM Motor-Generator or Engine Driven Welder

Connect the LN-8 control cable ground lead, to the frame terminal marked ⏚ near the power source terminal strip or to an unpainted frame screw. The power source must of course be properly grounded.

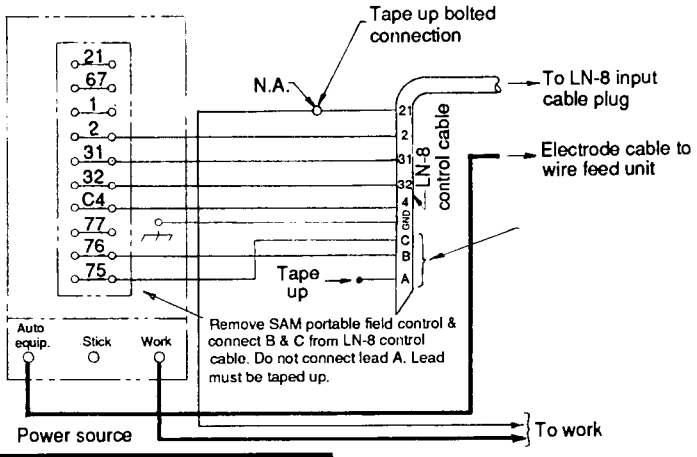

If using older LN-8 control cable (prior to use of A, B, C marking): Connect lead #76 to #76 on terminal strip, connect lead #77 to #75 on terminal strip, and tape up lead #75.

⚠ WARNING

ELECTRIC SHOCK can kill.

- **Do not operate with covers removed.**
- **Disconnect welding power source before servicing.**
- **Do not touch electrically live parts.**
- **Only qualified persons should install, use or service this machine.**

N.A. Extend lead 21 using #14 or larger insulated wire physically suitable for the installation. An S16586- [ ] remote voltage sensing work lead is available for this purpose. Connect it directly to the work piece keeping it electrically separate from the welding work lead circuit and connection. For convenience, this extended #21 lead should be taped to the welding work lead. (This extended #21 lead connection replaces the need to employ the remote work lead accessory on LN-8 meter kits which have a direct work lead jack.)

S14610
4-20-79

The Lincoln Electric Company
Cleveland, Ohio 44117-1199

Sec. K2.3.3-G

Connection of LN-8, NA-3 or LT-7 to SAF-600-F or SA-800-F and M.G. Solid State Field Control and K240 Contactor Kit

Note: Electrode polarity switches on power source and field control must be set for same polarity. Power source must be off when changing polarity.

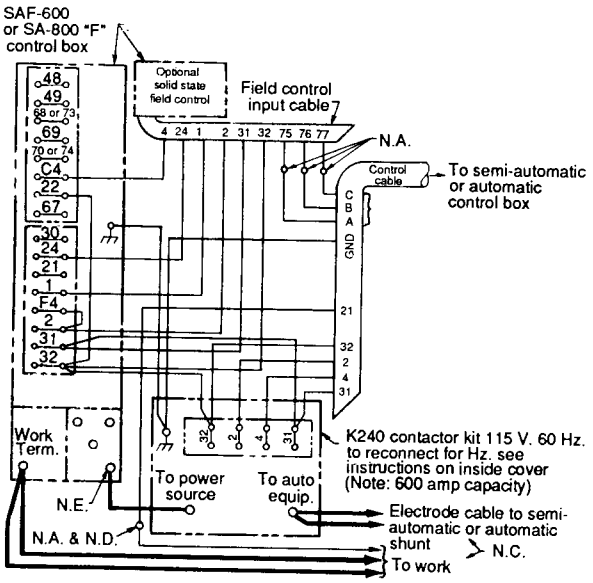

S15481
1-25-80

Connect the control cable ground lead to the frame terminal marked ⏚ near the power source terminal strip or to an unpainted frame screw. The power source must be properly grounded.

If optional solid state motor generator field control is not used, tape up separately the A, B and C leads from the control cable. Also connect a jumper from #2 to #24 on the power source terminal strip.

N.A. Bolt and tape connection.

N.B. If using an older control cable: connect lead #75 to lead #75 of field control, connect lead #76 to lead #76 of field control, connect lead #77 to lead #77 of field control.

N.C. Welding cables must be of proper capacity for the current and duty cycle of immediate and future applications.

N.D. Extend lead 21 using #14 or larger insulated wire physically suitable for the installation. An S16586- [ ] remote voltage sensing work lead is available for this purpose. Connect it directly to the work piece keeping it electrically separate from the welding work lead circuit and connection. For convenience, this extended #21 lead should be taped to the welding work lead. (This extended #21 lead connection replaces the need to employ the remote work lead accessory on LN-8 meter kits which have a direct work lead jack.)

N.E. Connect to desired electrode terminal.

Sec. K2.3.3-H

Connection of LN-8 or NA-3 to R3S-250 and R3S-325.

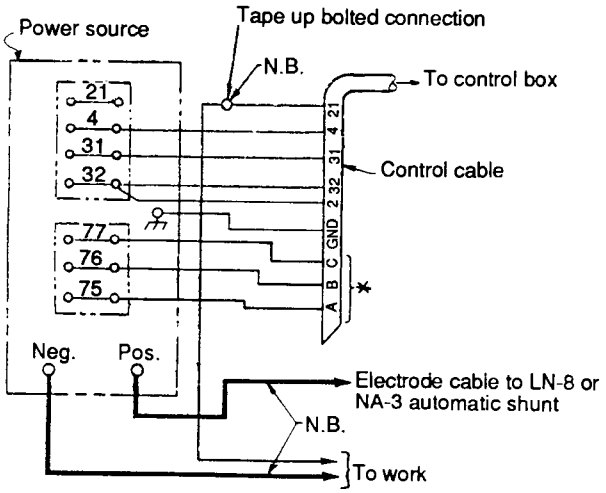

WARNING

ELECTRIC SHOCK can kill.

- **Do not operate with covers removed.**
- **Disconnect welding power source before servicing.**
- **Do not touch electrically live parts.**
- **Only qualified persons should install, use or service this machine.**

If a variable voltage board is present in the NA-3 automatic controls, the jumper lead on the V.V. Board must be connected to pin "L".

* If using an older control cable:
Connect lead#75 to #75 on Term. strip,
Connect lead #76 to #76 on Term. strip,
Connect lead #77 to #77 on Term. strip.

Connect the control cable ground lead to the frame terminal marked ⏚ near the power source terminal strip or to an unpainted frame screw. The power source must be properly grounded.

Above diagram shows electrode connected positive. To change polarity, reverse the electrode and work leads at the power source.

N.A. Welding cables must be of proper capacity for the current and duty cycle of immediate and future applications.

N.B. Extend lead 21 using #14 or larger insulated wire physically suitable for the installation. An S16586- [ ] remote voltage sensing work lead is available for this purpose. Connect it directly to the work piece keeping it electrically separate from the welding work lead circuit and connection. For convenience this extended #21 lead should be taped to the welding work lead. (This extended #21 lead connection replaces the need to employ the remote work lead accessory on LN-8 meter kits which have a direct work lead jack.)

S15293
1-25-80

Sec. K2.3.3-J

Connection of LN-8 or LN-9 to DC-600

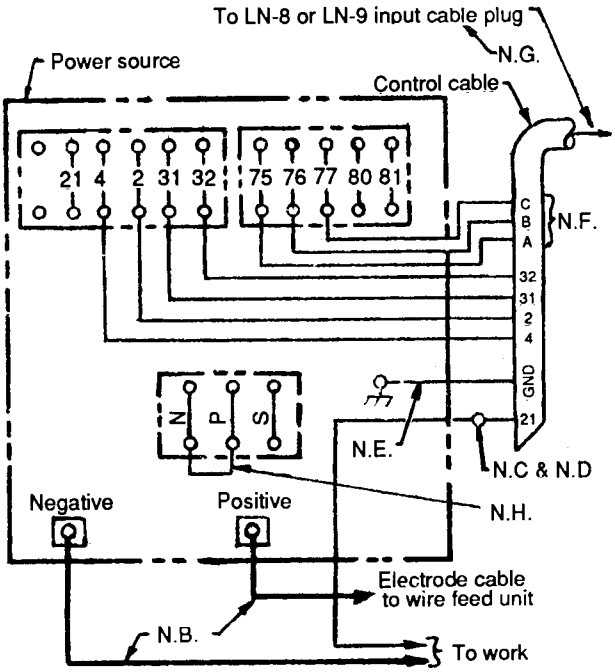

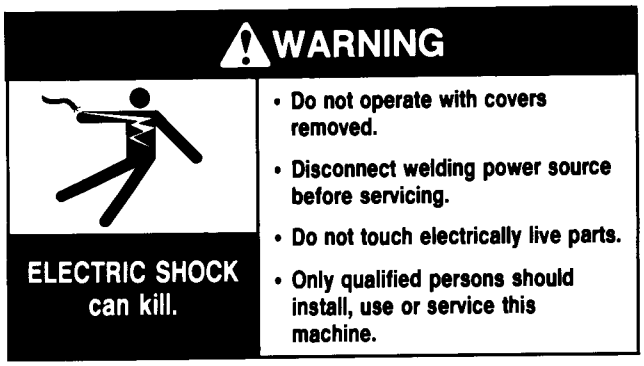

Above diagram shows electrode connected positive. To change polarity, turn power off, reverse the electrode and work leads at the power source and position the switch on power source to proper polarity.

For optimum performance with the LN-9, DC-600's with codes 8288 and above are preferred.

N.B. Welding cables must be of proper capacity for the current and duty cycle of immediate and future applications.

N.C. Extend lead 21 using #14 or larger insulated wire physically suitable for the installation. An S16586- [ ] remote voltage sensing work lead is available for this purpose. Connect it directly to the work piece keeping it electrically separate from the welding work lead circuit and connection. For convenience, this extended #21 lead should be taped to the welding work lead. (This extended #21 lead connection replaces the need to employ the remote work lead accessory on LN-9's which have a direct work lead jack.)

N.D. Tape up bolted connection.

N.E. Connect the LN-8 or LN-9 control cable ground lead to the frame terminal marked ⏚ near the power source terminal strip. The power source must be properly grounded.

N.F. If using an older LN-8 control cable: connect lead #75 to #75 on terminal strip, connect lead #76 to #76 on terminal strip, connect lead #77 to #77 on terminal strip.

N.G. The LN-9 voltage control jumpers must be connected as follows (refer to LN-9 Operating Manual):
White jumper on voltage board to pin 'S'
Blue jumper on voltage board (later units olny) or on start board (earlier units) to pin 'B'.

N.H. For DC-600 codes below 8200:
Connect a jumper from 'N' to 'P' on LN-9 only.
Connect a jumper from 'N' to 'S' on LN-8 only.
There is no NPS terminal strip on codes above 8200.

S16367
6-28-85N

The Lincoln Electric Company
Cleveland, Ohio 44117-1199

Sec. K2.3.3-K

Connection of LN-8 or LN-9 to DC-250, 400 and CV/CVI Power Sources

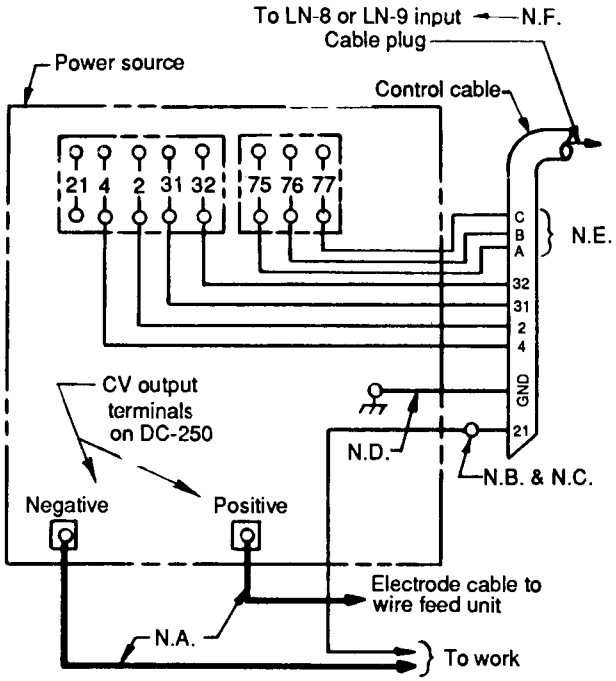

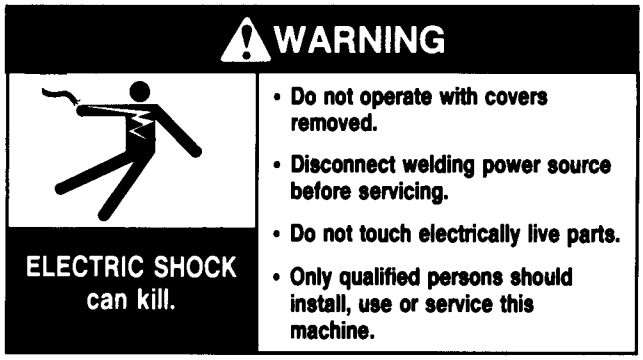

Above diagram shows electrode connected positive. To change polarity, turn power off, reverse the electrode and work leads at the power source and position the switch on power source and wire feeder (if equipped) to proper polarity. Also refer to note N.G.

N.A. Welding cables must be of proper capacity for the current and duty cycle of immediate and future applications.

N.B. Extend lead #21 using #14 AWG or larger insulated wire physically suitable for the installation. An S16586- [ ] remote voltage sensing work lead is available for this purpose. Connect it directly to the work piece keeping it electrically separate from the welding work lead circuit and connection. For convenience, this extended #21 lead should be taped to the welding work lead. (If the length of work lead circuit is short, and connections can be expected to be reliable, then control cable lead #21 does not need to be extended and can be directly connected to terminal #21 on the terminal strip. Note that this is not the preferred connection because it adds error to the wire feeder voltmeter reading.)

N.C. Tape up bolted connection.

N.D. Connect the control cable ground lead to the frame terminal marked near the power source terminal strip. The power source grounding terminal (marked and located near the power source input power connections) must be properly connected to electrical ground per the power source operating manual.

N.E. If using an older LN-8 control cable: Connect lead #75 to #75 on terminal strip, connect lead #76 to #76 on terminal strip, connect lead #77 to #77 on the terminal strip.

N.F. The LN-9 voltage control jumpers must be connected as follows (refer to LN-9 Operating Manual):
White jumper on voltage board to pin 'S'.
Blue jumper on voltage board (later units only), or on start board (earlier units), to pin 'B'.

N.G.* If lead #21 is to be connected to the terminal strip, connect to the #21 terminal that matches work polarity. This connection must be changed whenever the electrode polarity is changed.

* Does not apply to DC-400 below code 9200 with polarity switch.

Sec. K2.3.3-L

K318 Dual Process Contactor Kit

DC-400, CV-400 and CVI-500 Connection to LN-8 or LN-9 for the same Polarity Operation

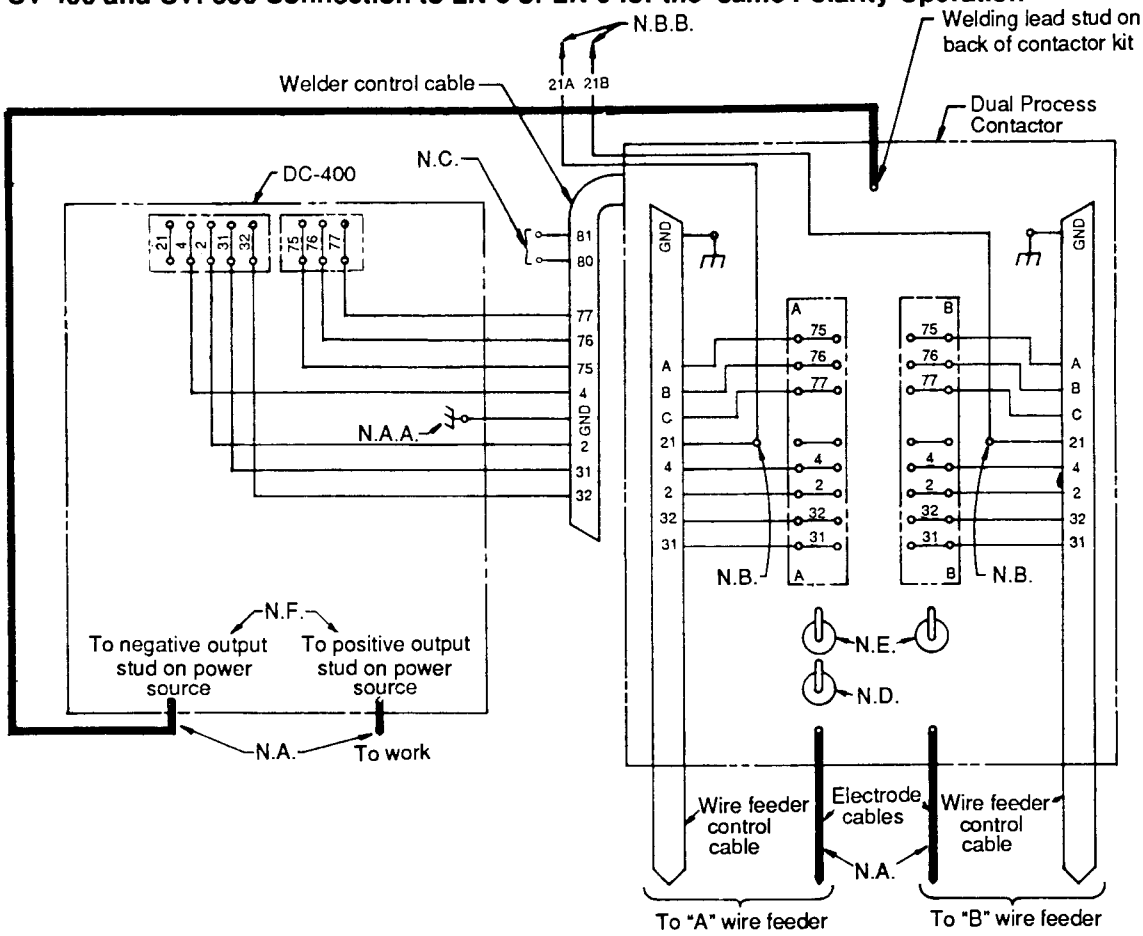

N.A.A. Connect the control cable ground lead to the frame terminal marked near the power source terminal strip or to an unpainted frame screw. The power source must be properly grounded.

N.B.B. Extend lead 21A & 21B using #14 or larger insulated wire physically suitable for the installation. An S16586 remote voltage sensing work lead is available for this purpose. Connect it directly to the work piece keeping it electrically separate from the welding lead circuit & connection. For convenience, these extended #21A & #21B leads should be taped to the welding work lead. Each lead must be connected directly to the work & leads must not be connected together.

N.A. Welding cables must be of proper capacity for the current and duty cycle of immediate and future applications.

N.B. Bolt and tape connections.

N.C. Tape up separately.

N.D. Put transfer switch in "Same polarity on feeders" position.

N.E. Mode switches on contactor kit are not functional when used with the power source.

N.F. Connection shown for negative polarity. For positive polarity reverse electrode and work cables connected to power source output studs.

For 50 HZ. operation
Disconnect both brown leads from terminal 31B and tape up each lead. Untape both red leads and connect to 31B.

⚠ WARNING

ELECTRIC SHOCK can kill.

- **Do not operate with covers removed.**
- **Disconnect welding power source before servicing.**
- **Do not touch electrically live parts.**
- **Only qualified persons should install, use or service this machine.**

M14550
1-20-89B

The Lincoln Electric Company
Cleveland, Ohio 44117-1199

Sec. K2.3.3-M

K318 Dual Process Contactor Kit

DC-400, CV-400 and CVI-500 Connection to LN-8 or LN-9 for Opposite Polarity Operation

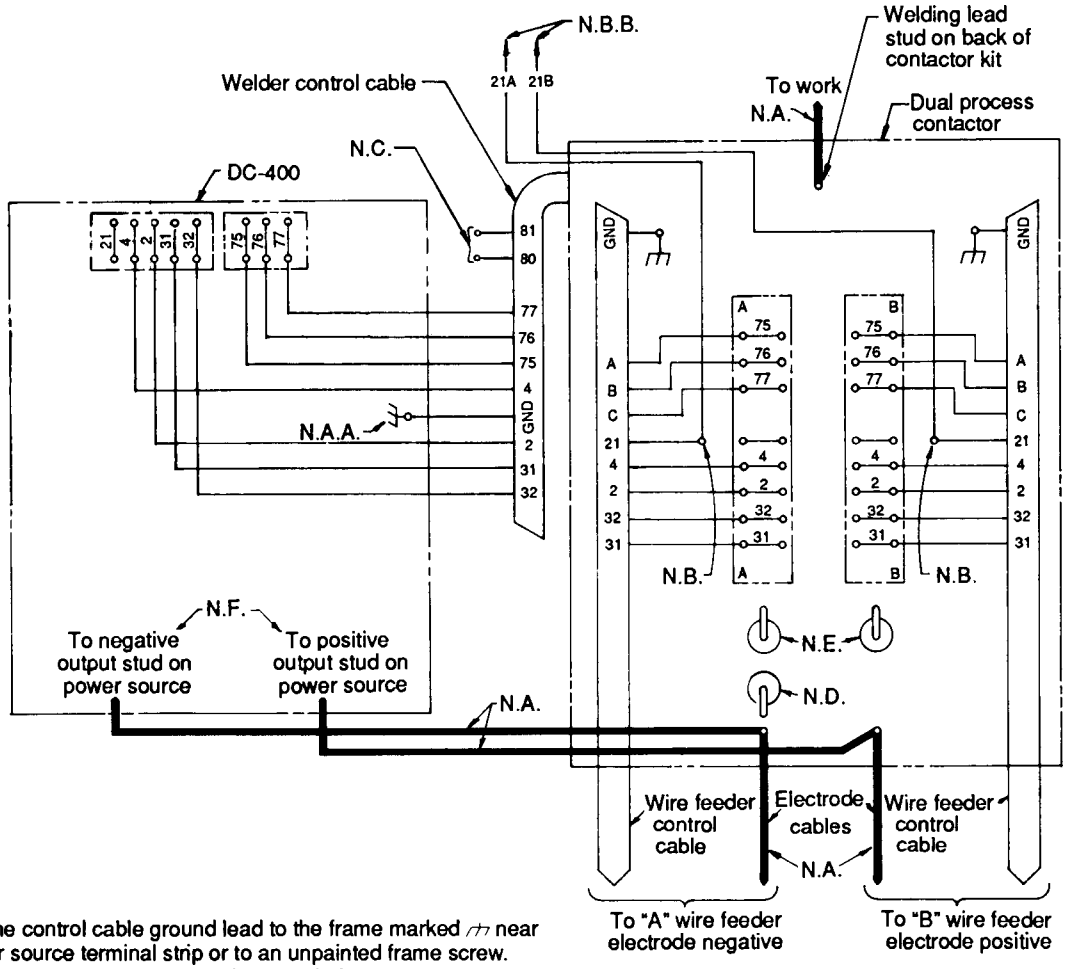

N.A.A. Connect the control cable ground lead to the frame marked near the power source terminal strip or to an unpainted frame screw. The power source must be properly grounded.

N.B.B. Extend lead 21A & 21B using #14 or larger insulated wire physically suitable for the installation. An S16586 remote voltage sensing work lead is available for this purpose. Connect it directly to the work piece keeping it electrically separate from the welding work lead circuit & connection. For convenience, these extended #21A & #21B leads should be taped to the welding work lead. Each lead must be connected directly to the work & leads must not be connected together.

N.A. Welding cables must be of proper capacity for the current and duty cycle of immediate and future applications.

N.B. Bolt and tape connections.

N.C. Tape up separately.

N.D. Put transfer switch in "Opposite Polarity on Feeders" position.

N.E. Mode switches on contactor kit are not functional when used with the power source.

N.F. To make "A" feeder positive polarity and "B" feeder negative polarity, reverse electrode cables connected to power source output studs.

WARNING

ELECTRIC SHOCK can kill.

- **Do not operate with covers removed.**
- **Disconnect welding power source before servicing.**
- **Do not touch electrically live parts.**
- **Only qualified persons should install, use or service this machine.**

For 50 HZ. Operation
Disconnect both brown leads from terminal 31B and tape up each lead. Untape both red leads and connect to 31B.

SEC. K2.5 — OPTIONAL FEATURES

⚠ WARNING

HIGH VOLTAGE can kill.

- **Have an electrician install and service this equipment.**
- **Turn the input power off at the fuse box before working on equipment.**
- **Do not touch electrically hot parts.**

Sec. K2.5.1
K261 and K262 Meter Kits

The K261 and K262 meter kits can be installed on all models built to Codes above 7575 (manufactured after July 1975). Installation instructions (L5649) are included with the kits.

Both kits include a combination ammeter and wire feed speed meter which operates while welding. It normally reads amperes. To read wire feed speed in in./min, set the toggle switch next to the meter for "Hi" or "Low" speed range as desired and press the spring loaded switch next to the meter.

Both kits include a voltmeter polarity switch and a "Direct Work Lead Jack". A 15' (4.5 m) lead with a jack plug on one end and an alligator clip on the other is included in the K262 kit and can be ordered as Part No. S15636 for the K261. When this lead is plugged into the jack, the normal voltmeter work sensing lead (#21 in the input cable) is disconnected from the circuit removing the work lead and its connection to work from the voltmeter reading. The voltmeter then reads between the shunt in the wire feeder and the alligator clip connection (usually on the work).

It is *not* necessary to employ the "Direct Work Lead" if #21 lead is extended directly to the work per the connection diagrams in Sec. K2.3.3 dated after 6-15-79A.

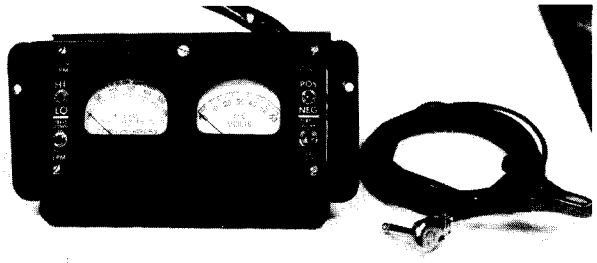

K-261 (Analog) (Lead Optional)

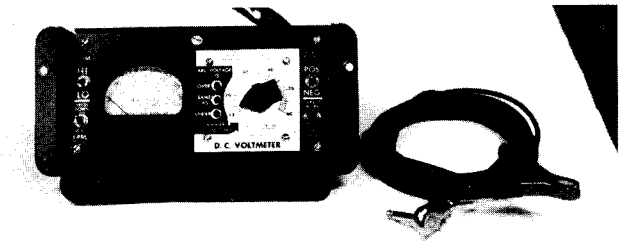

K262 (Electronic)

The K261 kit includes an analog voltmeter which indicates voltage directly on a scale.

The K262 kit includes an electronic voltmeter with indicator lights. A green light glows when the actual voltage matches the voltage preset on the voltmeter dial. Either red light glows when the voltage is higher or lower than the preset voltage. (The wire feeder must be recalibrated if the motor or the control P.C. board is replaced.)

November 1990

Sec. K2.5.2
K165 Ammeter-Voltmeter Kit (Obsolete)

[For all models (except LN-8F) built to codes under 7575 (manufactured before August 1975).]

The kit included a voltmeter, ammeter, voltmeter polarity switch and mounting parts. Installation instructions were included with the kit.

June 1975

Sec.K2.5.3 **(Obsolete)**
K207 Wire Feed Speed Meter-Voltmeter Kit

[For LN-8N and LN-8NE models built to codes under 7575 (manufactured before August 1975).]

The kit included a wire feed speed meter and range switch, a voltmeter and polarity switch, mounting parts, and a calibration tool. Installation and calibration instructions (M12657) were included with the kit.

Because of the variations in wire feed motors, calibrate the wire feed speed meter when the kit is installed. The meter should need recalibration *only* with *major* changes in feed speeds, addition or removal of 22-1/2 or 45' (6.9 or 13.7 m) extension cables (NE or SE) or replacement of the feed motor.

November 1990

Sec. K2.5.4
Auxiliary Equipment Contacts

The power for 115 volt AC auxiliary equipment can be obtained from the terminals inside the control box. The contacts are "hot" only when the welding circuit is "on".

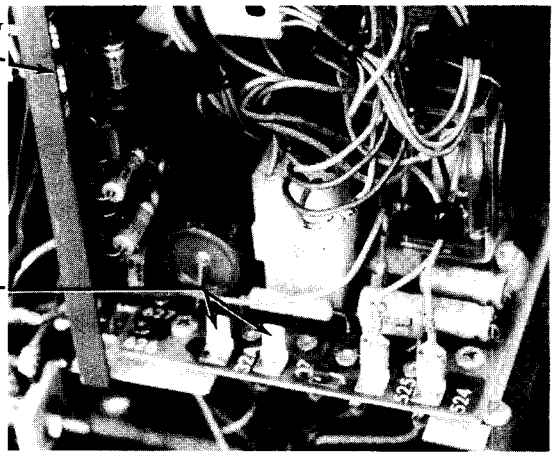

The current draw of this circuit must not exceed 1/4 ampere.

> **CAUTION:** Do not connect the power source contactor to these terminals — see Sec K2.3.4-B.

Turn the power source off.

Install 1/4" (6.0 mm) quick connect terminals to the leads from the auxiliary equipment. Route the leads through the rectangular hole in the back of the control panel and connect to terminals #32A and 7 on the bottom PC board.

November 1990

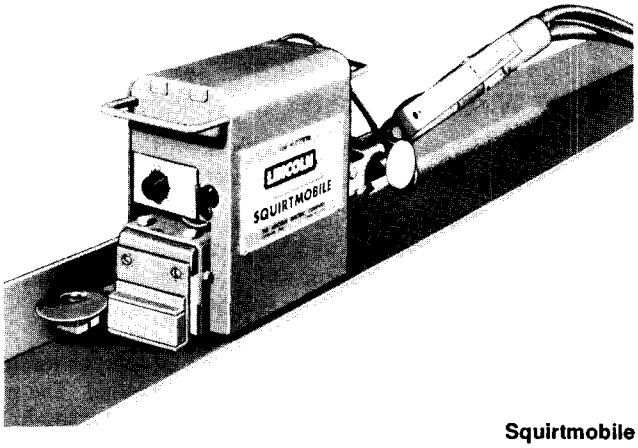

Squirtmobile

Sec. K2.5.5
Squirtmobile®

The Squirtmobile is a self-propelled trackless carriage that carries the K114 submerged arc gun on long welds for automatic welder economy without high fixture costs.

To use the LN-8S or LN-8SE with the Squirtmobile install a K161 Power Pack Kit per Sec. K2.5.6.

August 1974

Sec. K2.5.6
K161 Mechanized Travel Power Pack

The K161 power pack supplies the power needed by the K110 mechanized hand travel unit or Squirtmobile when used with the K114 submerged arc welding gun.

With the power source off, connect the leads of the power kit box (the one with the handle) to the power source. Extend the control cable to the wire feed unit. Mount the small box at the end of the cable to the front of the LN-8 wire feed unit (the K161 is not designed for use with an LN-8F). Connect the K114 gun control cable to the polarized plug built into this small box.

Complete installation instructions are shipped with the kit.

December 1981

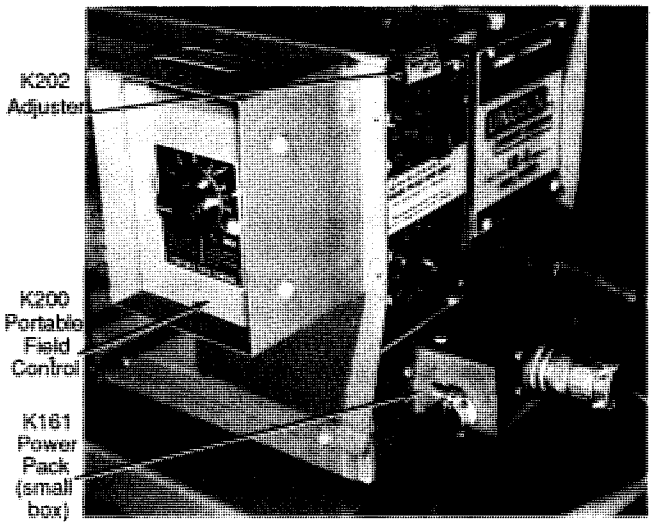

Sec. K2.5.7
K202 Burnback Kit

This kit is useful to help prevent the electrode from sticking in the crater at the end of the weld in two types of welding applications:

K202 Kit P.C. Board

OPTIONAL FEATURES — CONT'D.

Sec.K2.5.7 (Continued)

1. Welding with small diameter [.035 thru 1/16" (0.9 thru 1.6 mm)] wires at fast wire feed speed when there is a tendency for wire overrun.
2. When the semiautomatic gun is mounted in a fixture or on the Squirtmobile in such a manner that it cannot be lifted from the work at the end of the weld.

The kit delays the dropout of the contactor allowing the electrode to burn back from the crater at the end of the weld. The delay time is adjustable for optimum burnback for different wire sizes, processes, procedures, etc.

Installation instructions are shipped in the kit.

November 1990

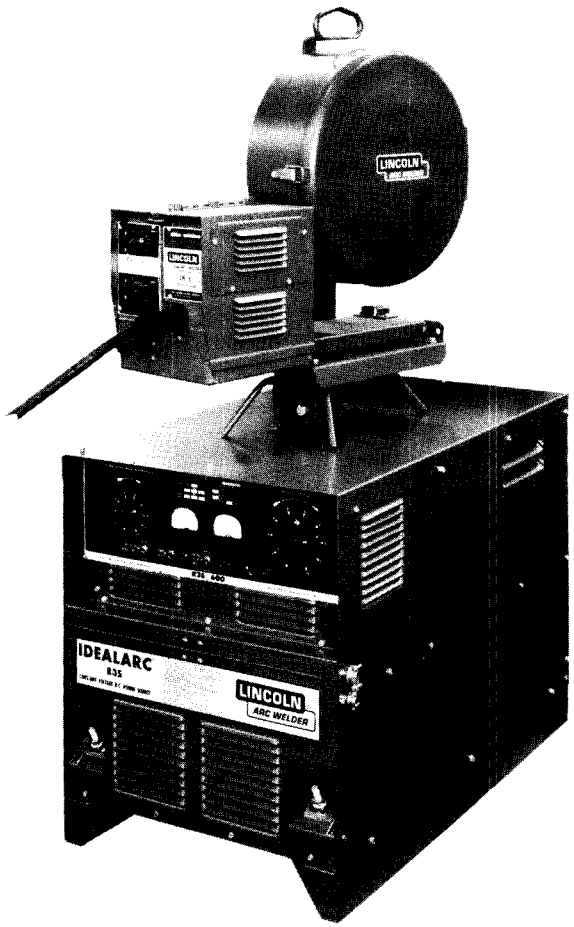

Sec. K2.5.8

K178 Mounting Platform — LN-8 on Idealarc R3S

This is a turntable type platform for mounting the LN-8 on the top of Idealarc R3S power sources. Bolt the platform to the lift bail per instructions supplied with the platform.

August 1973

Sec. K2.5.9

K162 Spindle for Mounting Readi-Reels and 10 thru 30 Pound (4.5 thru 13.5 Kg) Spools

(For use with K303 Wire Reel Stand)

To mount the spindle kit for 10 thru 30 pound (4.5 thru 13.5 Kg) spools, remove the shaft for the standard 50-60 pound (22.5-27.2 Kg) wire coils from the mounting framework. Install the spindle per the instructions shipped with the kit.

Adjust the brake tension screw (see Sec. K3.1.8-B) on the spindle as needed.

When used with Readi-Reels the K363 Readi-Reel Adapter is required.

November 1990

Sec. K2.5.10

Wire Reel Enclosure Door

This door is standard on the LN-8NE (with an enclosed wire reel mount) and the LN-8SE machines. It is optional for LN-8S and LN-8N.

The door kit (M11514) includes a hinged door and a sliding bottom seal. When installed, the wire reel mounting becomes a completely enclosed housing. Instructions are included in the kit. Put the bottom seal panel in the forward

Sec. K2.5.10 (Continued)

position when using .035 thru 1/16" (0.9 thru 1.6 mm) electrode and in the rear position when using 5/64 thru .120" (2.0 thru 3.0 mm) electrode.

November 1990

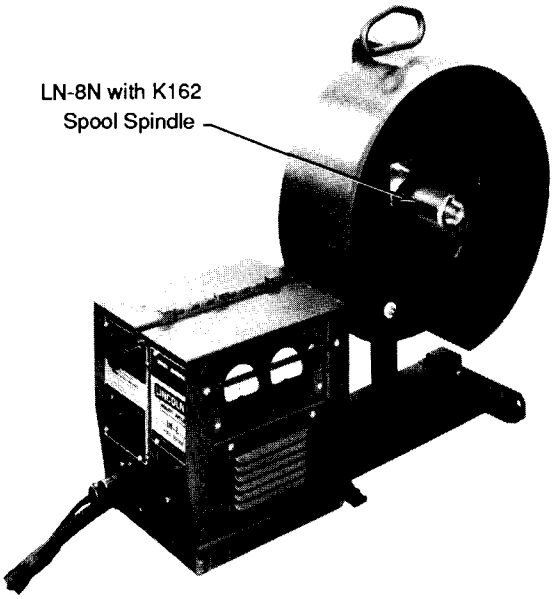

Sec. K2.5.11

K185 Voltage Indicator

A rugged, portable arc voltage monitoring device with "High" and "Low" warning lights which indicate when the welding voltage varies more than about 1/2 volt on either side of the value preset on the calibrated dial. Covers a range of 12 to 60 volts, DC only. Valuable where arc voltage must be closely maintained. Instructions are permanently on the back of the device.

May 1974

Sec. K2.5.12

K-163 Undercarriage

The undercarriage is standard for LN-8S and LN-8SE machines. It is optional for LN-8N and LN-8NE.

Wheels, handle and hardware are shipped with the undercarriage. Mount the casters at the front and wheels to the rear of the platform. Be sure the round rear axle is to the rear of the mounting bolts that hold the U-shaped axle member to the frame. Bolt the handle to the front of the platform so the LN-8 can be titled back and wheeled like a two-wheeled truck. Holes for installing the wire reel support are provided in the platform.

August 1973

Sec. K2.5.13

K200 Portable Field Control

For SAF-600, SA-800 and SAN motor-generator type power sources, this control moves the output adjustment from the power source to the wire feeder. It is a rheostat in a box to be mounted to the control (left) side of the LN-8 wire drive unit using the holes provided. A 25' (7.5 m) three-conductor cord connects the rheostat to #2 and 24 on the power source terminal strip. The cord can be lengthened as needed using #16 or larger wire. Installation instructions are included with the kit. See photo under Sec. K2.5.6. The K224 (see Sec. K2.5.15) can be substituted for the K200.

November 1990

Sec. K2.5.14

Constant Current Conversion Parts (Formerly Variable Voltage)

To convert an LN-8N, LN-8NE or LN-8F for welding with a constant current power source, purchase a constant current PC board (shipped with mounting insulation), constant current dial plate and either a flux tank or K119 flux cone for use with a K112 or K113 submerged arc gun.

To install, turn all power off. Mount the PC board and its insulation on the LN-8N and LN-8NE panel between the switches and the circuit breaker or the LN-8F left wall of the control section. Use the screws provided with the PC board. Locate the connector on the end of the harness lead assembly and, grasping both connectors, remove the plug. This jumper plug will no longer be needed as long as the constant current PC board is installed in the unit. Plug the connector into the constant current PC board receptacle making certain it is seated properly.

Install the new dial plate over the old one. Be sure the wire feeder and power source are properly set for constant voltage or constant current as appropriate (see Sec. K2.3.2).

November 1990

OPTIONAL FEATURES — CONT'D.

Sec. K2.5.15
K224 Solid-State Remote Control

Can be substituted for the K200 Portable Field Control to move the full range output control from the power source to the LN-8 when using SAF-600, SA-800 and SAN motor-generator power sources. It mounts on the power source. Installation instructions are shipped with the kit.

June 1975

Sec. K2.5.16
K377 Small Mounting Stand for Readi-Reel® Coils or 10-30 Pound (4.5-13.5 Kg) Spools with 2" (50 mm) I.D.

This assembly includes a small frame to which is attached a wire reel spindle similar to the K162 Spindle. The unit is supplied with the K363P Readi-Reel Adapter so the Lincoln "Readi-Reel Electrode Coils" can be used. Without the adapter the unit is capable of handling spools with a two inch (50 mm) I.D., a 12 inch (305 mm) max. O.D., and 4.06 inch (103 mm) max width. A spacer for 10 pound (4.5 Kg) coils is also supplied. The spindle has an adjustable braking system.

November 1990

Sec. K2.5.17
K378 — Small Mounting Stand for 13-14 Pound (6.0-6.4 Kg) Innershield® Coils.

This assembly includes the same smaller frame as used in the K377 and a fully enclosed canister system for dereeling of the 14 pound (6.4 Kg) coil. This system has a fixed brake for the 14 pound (6.4 Kg) coil.

November 1990

OPTIONAL FEATURES — CONT'D.

Sec. K2.5.18
(File as Sec. N3.5.1 in IM-294)

K317 Dual Process Kit (No Polarity Change)

The Dual Process Kit is a transfer device that connects two wire feeders to a single power source and enables each wire feeder to weld at a different procedure without changing any dials. Simply actuating the circuit of the desired wire feeder turns the unit on and its controls set the complete procedure including the power source output level. When used with a DC-600, the wire feeders can be set for different modes — "CV Innershield" or "CV Submerged Arc". Both wire feeders will operate at the same polarity.

The unit is a small control box that mounts on the side of the power source and is connected to the welder terminal strip. Each wire feeder control cable is connected to the Kit.

The electrode of the wire feeder not being used will be "hot" although, of course, there will be no wire feed. This usually is no problem since the unused gun or nozzle can be placed safely out of the way. If, however, it is desired to have the unused electrode "cold", use a K318 Dual Process Contactor Kit connected for same polarity operation.

Maximum versatility is obtained when the Kit is used with a DC-600 power source. The following chart shows the advantages that a DC-600 has over other welders. The K317 should not be used with power sources other than those shown below.

Power Source	Voltage Range	Mode Change	Mounting Adapter
DC-400	Full	No	No
DC-600	Full	Yes	Yes
SAF-600 or SA-800 with K224 Solid State Remote Control	Full	No	No
SAM	Partial*	No	No
R3S	Limited*	No	No

*The output range is limited by the voltage change obtainable by the remote control. The voltage range between the two procedures required may be outside the range covered by the remote control and it would be impossible to set the procedure without adjustment at the power source.

Although designed primarily for use with the LN-8 or LN-9 wire feeders, the kit will also work with two LN-7's when they are used with two remote control units or with two NA-3's, NA-4's or NA-5's.

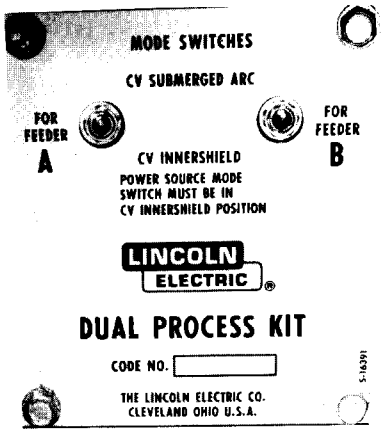

Closeup of controls for the K317 dual process kit. Note, when used with a DC-600, each mode switch should be set in the proper position for the process being used. K317 mode switches have no function with any other power source.

INSTALLATION

Refer to the following connection diagrams to connect the Dual Process Kit to the power source and LN-8 or LN-9 wire feeders.

DC-400	M14549
DC-600	M13751
R3S and SAM	M13702
SAF-600 or SA-800 with Solid State Remote Field Control	M13701

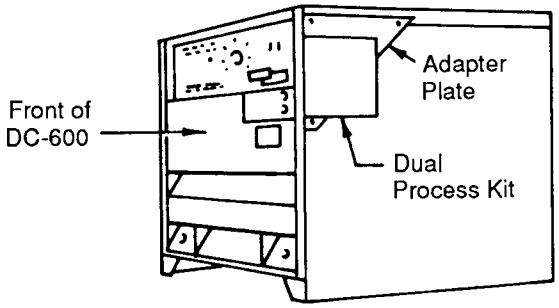

Turn the power source off. On the DC-600, fasten the adapter plate of the Dual Process Kit to the control terminal strip side of the power source using two roof screws and one front panel screw.

On all other power sources, remove the adapter plate from the Kit and fasten Kit to the side of the power source or some convenient location so its control cable can be connected to the power source terminal strip. Use control box as a template to locate the four 5/32" (4.0 mm) diameter holes that must be drilled in the case side. Mount unit with the four #10 self-tapping screws provided.

Remove cover from Kit and connect wire feeder control cables to the terminal strips in the Kit. Connect the Kit control cable to the power source terminal strip per the appro-

Sec. K2.5.18 (Continued)

priate connection diagram. Replace cover on Kit and unit is ready to operate.

OPERATION

For DC-600, set the mode switch on the front of the power source to "CV Innershield". Set the mode switches on the kit to the position required by the process used on the wire feeder. On all other power sources the mode switches have no effect.

To set procedures, weld with "A" wire feeder and set procedure with its control dials. Then weld with "B" wire feeder and set the procedure with its control dials. With the LN-9, it is not necessary to weld. Each unit will now weld at its required procedure when its gun trigger is actuated. Do not try to weld with both units simultaneously because the procedure will not be correct and the power source may be overloaded.

WARNING: Place unused gun so electrode does not touch work, wire feeder case or other metal because **both electrodes become electrically hot when either gun trigger is pulled.**

TROUBLESHOOTING

1. No control of power source output	a. DC-600 or R3S power source toggle switch not set to remote. Set power source per its instruction manual. b. Defective K317 relay — replace relay. c. Defective wire feeder control rheostat. Refer to operating manual.
2. Poor bead shape or arc response when using DC-600 power source.	a. Mode switch in wrong position on Dual Process Contactor Kit or on welder. Place in correct position. b. Defective K317 relay — replace relay.
3. Poor starting when using DC-600 (below Code 8200).	a. Improper connection on power source terminals N, P, and S. Refer to connection diagram to connect properly.

OPTIONAL FEATURES — CONT'D

Sec. K2.5.19
(File as Sec. N3.5.2 in IM-294)

K318 DUAL PROCESS CONTACTOR KIT (With Polarity Change)

The dual process contactor kit is a control box (transfer device) that permits connection of two wire feeders to a single power source and enables each wire feeder to weld at a different procedure and polarity without changing any dials or switches. Simply actuating the gun trigger of the desired wire feeder turns the unit on, selects the polarity and sets the complete procedure, including power source output level. When used with a DC-600, the wire feeders can also be set for different modes — "CV Innershield" or "CV Submerged Arc". The kit can also be connected to operate with the same polarity on each wire feeder. The kit is rated 600 amperes at 100% duty cycle.

Maximum versatility is obtained when the kit is used with a DC-600 power source. The following chart shows the advantage that a DC-600 has over other welders.

Power Source	Voltage Range	Mode Change
DC-400	Full	No
DC-600	Full	Yes
SAF-600 or SA-800 with K224 Solid-State Remote Control	Full	No
SAM	Partial*	No
R3S	Limited*	No

* The output range is limited by the voltage change obtainable by the remote control. The voltage range between the two procedures required may be outside the range covered by the remote control and it would be impossible to set the procedure without adjustment at the power source.

Although designed primarily for use with the LN-8 or LN-9 wire feeders, the kit will also work with two LN-7's when they are used with two remote control units.

Installation

If it is desired to mount the K318 on top of a DC-600, an S16552 mounting bracket is available.

Refer to the following connection diagrams to connect the dual process contactor kit to the power source and LN-8 or LN-9 wire feeders.

To connect the two wire feeder control cables, remove the cover from the contactor kit for access to the terminal strips. Run the cables through the two box connectors, then under the "L" shaped brackets mounted on the bottom to keep the cables away from the contactors. Connect the leads to the two terminal strips per the appropriate connection diagram.

If 50 hertz is used, reconnect contactor coil leads per the wiring diagram.

K318 Kit	Below Code 8020	Above Code 8020
Opposite polarity operation:		
DC-400	—	M14551
DC-600	M13720	M13918
R3S and SAM	M13706	M13916
SAF-600 and SA-800 with solid-state remote field control	M13704	M13914
Same polarity operation:		
DC-400	—	M14550
DC-600	M13736	M13917
R3S and SAM	M13705	M13915
SAF-600 and SA-800 with solid-state remote field control	M13703	M13913

Connect the dual process contactor kit control cable to the power source per the connection diagram. Two 3/0 leads are provided to connect the power source output studs to the kit for opposite polarity operation. Only one lead is used for same polarity operation. Connect work lead and wire feeder electrode leads as shown on the diagram. Put cover back on control box and unit is ready to operate.

CAUTION: When fixture mounted wire feeders are used, the wire reels must be insulated from each other and insulated from their mounting structure.

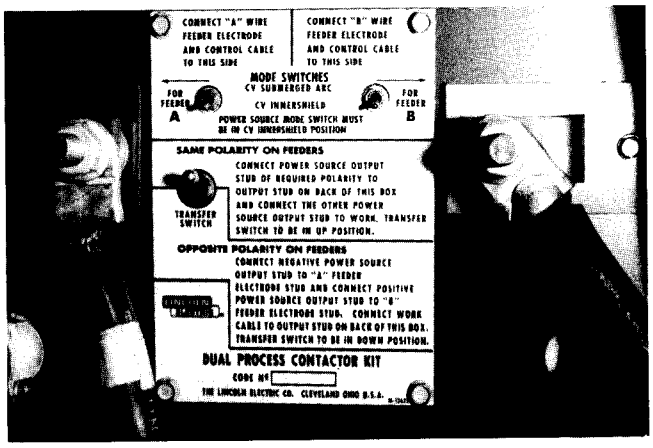

Closeup of controls for the K318 dual process contactor kit. NOTE: when used with a DC-600, each mode switch should be set in the proper position for the process being used. K318 mode switches have no function with any other power source.

Sec. K2.5.19 (Continued)

Operation

For DC-600, set the mode switch on the front of the power source to "CV Innershield". Set the mode switches on the kit to the position required by the process used on the wire feeder. On all other power sources the mode switches have no effect. Check that transfer switch on the dual process contactor kit is in the proper position. When wire feeders are connected for opposite polarity operation, wire feeder "A" will be negative polarity and "B" will be positive polarity.

Codes Above 8020:

Before welding, actuate gun trigger once to interlock contactor and set procedure. Subsequent welding with the same gun can be done in a normal manner. If the trigger is not operated once when changing feeders, the first weld start may be poor if the voltage setting of the two feeders is far apart.

Troubleshooting

Trouble	Cause and Remedy
1. Electrode feeds, but is electrically cold.	1. Transfer switch is in wrong position. Place in correct position.
2. Poor bead shape or arc response when using DC-600 power source.	2. Mode switch in wrong position on dual process contactor kit or on welder. Place in correct position.
3. No control of power source output.	3. a. Power source voltage control switch not set to "remote". Set power source per its instruction manual. b. Defective relay in kit. Check operation of 1CR and replace if defective. c. Defective wire feeder control rheostat. Refer to operating manual.
4. Poor starting when using DC-600 (below Code 8200).	4. Improper connection on power source terminals N, P and S. Refer to connection diagram to connect properly.
5. Poor starting or burn back on the first weld when changing wire feeders.	5. Relays not transferred properly. Actuate gun trigger once before starting when changing from one wire feeder to another.

November 1990.

SEC. K3 — OPERATING INSTRUCTIONS
CONTROL ADJUSTMENTS AND LOADING THE MACHINE

⚠ WARNING

ELECTRIC SHOCK can kill.

- Do not operate with covers removed.
- Turn off power source before installing or servicing.
- Do not touch electrically hot parts.
- Turn the input power to the welding power source off at the fuse box before working in the terminal strip.

MOVING PARTS can injure.

- Keep away from moving parts.

- Only qualified personnel should install, use or service this equipment.

Sec. K3.1.1

Introduction

Input power (115VAC, 2.5A) is supplied by the Power Source.
Duty Cycle: The amount of welding perfromed in a 10 minute period, expressed nas a percentage.

1. **Optional Meters** (See descriptions in Sec. K2.5.1, .2 and .3)

The Ammeter indicates welding current in amps.

The Wire Feed Speed Meter is normally used only when the LN-8 is connected to a constant voltage power source. To read wire feed speed in in./min (rather than reading amps) press the spring loaded switch next to the meter. Set the range switch next to the meter to 'Lo' when using speeds below 300 in./min (7.6 m/min) and read the feed speed on the red [0-300 in./min (0-7.6 m/min)] scale. For higher feed speeds, set the range switch to 'Hi' and read the speed on the back [0-600 in./min (0-15 m/min)] scale.

The Electrode Polarity Switch must be set so the analog voltmeter reads up scale or the electronic voltmeter indicator lights operate.

The Analog Voltmeter indicates voltage directly on a scale.

To Operate the Electronic Voltmeter first set the appropriate voltmeter sensitivity on the rear terminal strip. Jumper A to B for the Innershield process and the green "Same As" light will remain on over a sensitivity range of 1 volt. Jumper B to C for the submerged arc process and the green "Same As" light will remain on over a sensitivity range of 2 volts. Set the electronic voltmeter pointer knob to the welding voltage desired. While welding, if the arc voltage is within the sensitivity range, the green "Same As" light will remain on, though fluctuations of the welding voltage may cause occasional blinking. If the arc voltage is either high or low the green light will be off and the appropriate "Over" or "Under" light will turn on. The wire feeder or power source voltage control should then be adjusted until the voltage is within the range where the green "Same As" light remains on. The center of this range indicates that the welding voltage matches the electronic voltmeter pointer knob setting within ±1/2 volt.

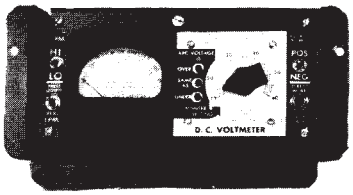

Lincoln Specified Procedures give voltmeter readings taken between the work and the gun cable brass connection block inside the LN-8. To match these voltage readings, the #21 lead must be extended directly to the work per the connection diagrams in Sec. K2.3.3 dated after 6-15-79A or the "Direct Work Lead" must be used.

2. **Inching the Electrode**

Press the trigger on the gun to inch the electrode. Direction of inching is controlled by the 'Direction of Wire Feed' switch. If the electrode is inching in the wrong direction, reverse the position of the switch. If the drive rolls do not turn, check to see that the grounding lead protector is set.

WARNING: When inching, the electrode and drive mechanism are always "hot" to work and ground and remain "hot" several seconds after the gun trigger is released.

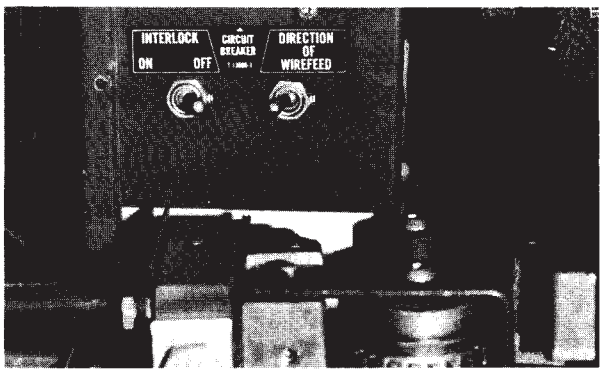

Sec. K3.1.1 (Continued)

3. **Trigger Interlock**

With the 'Trigger Interlock' switch 'Off', the wire feed motor runs and the welding circuit is energized only when the gun trigger is pressed. The operator must hold the trigger in from the start to finish of the weld. To stop the arc, release the trigger and lift the gun from the work.

With the 'Trigger Interlock' switch 'On', the operator holds the trigger until the arc is established, then the trigger can be released. When the weld is completed, the operator raises the gun from the work to break the arc. This stops the wire feed and de-energizes the welding circuit.

4. **Wire Reel Brake**

The mount for standard 50 and 60 pound (22.7 and 27.2 Kg) electrode coils includes a two position brake assembly. Generally the brake should be at the inner position (nearest to the wire reel shaft) for wire feed speeds below 400 in./min. It should be at the outer position for faster wire speeds. To adjust the brake position, remove the wire reel. Pull the cotter pin that holds the brake shoe to the arm, move the shoe and replace the cotter pin. Do not bend the cotter pin — it is held in place by a friction fit.

Instructions for adjusting the brake tension of the spindle for 25 pound (11 Kg) spools, see Sec. K3.1.8-B.

5. **Constant Voltage or Constant Current**

Use a constant voltage or constant current type power source as required for the application (see Sec. K2.3.1). Be sure the power source and wire feeder are properly connected and set for either constant voltage or constant current as appropriate (see Sec. K2.3.2).

6. **Circuit Protection**

The LN-8 includes a circuit breaker, field circuit fuse, motor thermal protector and ground lead protector. See Sec. K6.1.5 for a description of the function of these components.

November 1990

Sec. K3.1.2

Welding with a Constant Voltage Power Source

1. Adjusting Current and Voltage

'Amps' Control — All Power Sources
Set the welding current (or wire feed speed) with the LN-8 'Amps' control.

'Volts' Control — DC-600 Power Source
Set mode switch to CV Innershield or CV Subarc, as required.

Place machine output control toggle switch in the 'Output Control Remote' position.

Total voltage control is now at the LN-8.

'Volts' Control — Idealarc R3S Power Sources
Set the power source for about the voltage required per the R3S instruction manual. Make final adjustments with the LN-8 'Volts' control (or the 'Fine Voltage Control' on the optional 'Line Voltage Compensator').

'Volts' Control — SAM Power Sources
Set the power source for about the voltage required per the SAM instruction manual. Make final adjustments with the LN-8 'Volts' control.

If using the variable inductance control (see SAM instruction manual), set the SAM 'Current Control' as desired in the 8 o'clock range.

'Volts' Control — SAF-600, SA-800 and SAN Power Sources
Be sure the SA-800 or SAF-600 'Voltage Range' switch is set to 'Low' and the cable from the power source contactor box is connected to the 'Innershield' stud. (Exception: When a slightly drooping output curve is needed with the SAF-600 — usually when welding with less than 30 volts — connect the input cable to the '450-Max. Sub-Arc' stud.)

To adjust output voltage:
1. If the K200 Portable Field Control (see Sec. K2.5.13) is installed, use the field control rheostat mounted to the side of the LN-8.
2. If the K224 Solid-State Field Control (see Sec. K2.5.15) is installed, use the LN-8 'Volts' control.
3. If neither field control is installed, use the 'Voltage' control on the power source.

2. Making Test Welds [3/32" (2.4 mm) NS-3M Electrode with 2-3/4" (70 mm) Electrical Stickout]
   a. Be sure the power source and wire feeder are properly set for constant voltage welding (see Sec. K2.3.2).
   b. Set the polarity switch on the power source for positive polarity. With an Idealarc R3S, connect the electrode cable to the 'Positive' stud.
   c. Set the 'Electrode Polarity' switch on the optional meter kit so the voltmeter reads upscale.
   d. Set the 'Direction of Wire Feed' switch so the wire feeds out of the gun.
   e. Set the power source for about 30-31 volts. Set the LN-8 'Volts' control to 6.
   f. Set the LN-8 'Amps' control to 4.
   g. Set up and ground a piece of 3/8 – 1/2" (9.5-13 mm) scrap steel. Inch the electrode so it extends about 1/2 — 3/4" (13-19 mm) beyond the end of the gun for starting.
   h. Hold the gun with the electrode just off or lightly touching the work. Do not push the wire into the work. Press the gun trigger to start to weld. See the "Innershield Welding Guide" for detailed Innershield welding techniques.
   i. Adjust the electrical stickout and the actual welding current and voltage as needed.

November 1990

SEC. K3 — OPERATING INSTRUCTIONS (CONT'D)

Sec. K3.1.3
Welding With Constant Current Power Sources

1. Adjusting Current and Voltage

'Volts' Control — All Power Sources
Set the welding voltage with the LN-8 'Volts' control.

'Amps' Control — DC-600 Power Source
Place mode switch in the CC submerged arc position.

Place machine output control toggle switch in the 'Output Control Remote' position.

Total current control is now at the LN-8.

Semiautomatic or automatic welding in CC mode. DC-600's with stick option

1. Codes between 8000 and 8045 — Turn the input power off. Open the control box cover behind the nameplate for easy access to the upper terminals of the terminal strip. Remove the double ("piggy-back") terminal from #32. Separate the red lead and the black lead and tape up the red lead. Reconnect the black lead to #32. Check to be sure there is still 115V AC between terminals #31 and #32 when the DC-600 is turned on.

2. Codes 8046-8212 — Turn the input power off. Open the terminal strip access door. Remove and tape up the DC-600 red lead #32 on the upper screw of the terminal strip.

'Amps' Control — SAM Power Sources
Set the 'Current Control' on the power source for about the current required. Make final adjustments with the LN-8 'Amps' control.

'Amps' Control — SAF-600 and SA-800 Power Sources
Be sure the power source 'Voltage Range' switch is set to 'High'. Connect the cable from the power source contactor box to the sub-arc stud with the lowest current range that still permits welding at the desired current. For example, if you want 500 amps welding current, use the '300-575' stud and not the '450-Max.' stud.

To make the final adjustments:
1. If the K200 Portable Field Control (see Sec. K2.5.13) is installed, use the field control rheostat mounted to the side of the LN-8.
2. If the K224 Solid-State Field Control (see Sec. K2.5.15) is installed, use the LN-8 'Amps' control.
3. If neither field control is installed, use the 'Voltage' control on the power source.

2. Making Test Welds [5/64" (2.0 mm) electrode with 3/4" (19 mm) stickout]

a. Be sure the power source and wire feeder are properly set for constant current welding (see Sec. K2.3.2).
b. Set the polarity switch on the power source for positive polarity.
c. Set the 'Voltmeter Polarity' switch so the voltmeter reads up scale.
d. Set the 'Direction of Wire Feed' switch so the wire feeds out of the gun.
e. Set the power source for about 500 amps. If using a SAM power source set the LN-8 'Amps' control to 5.
f. Set the LN-8 'Volts' control to 5.
g. Set up and ground a piece of at least 1/2" (13 mm) steel scrap. Cut the wire at the gun to a sharp point using a pair of side cutters or diagonal cutters. Improperly clipped electrode may produce poor starts and arcing of the contact tip. Do not let the clipped end of the wire fall back into the gun.
h. Hold the gun over the work, allow a mound of flux to form, press the trigger and start the arc by scratching through the flux. See "How To Make Submerged Arc Welds" for additional submerged arc techniques.
i. Adjust welding current and voltage when welding as needed.

November 1990

Sec. K3.1.4
Linc-Fill Long™ Stickout Welding

The built-in controlled acceleration of the LN-8 wire feed motor gives good starting with normal stickout and Linc-Fill (long electrical stickout) procedures. No rewiring is needed. Simply install the proper stickout extension on the gun, set the procedures and weld. The electrode should be lightly touching the work when the trigger is pressed.

When submerged arc welding using 3-1/4" (80 mm) stickout and a constant current power source at currents over 500 amps, there may be a tendency for the electrode to blast off in the extension guide at the start. This problem can be corrected by reducing the current to 500 amps for the start. When the arc starts, quickly increase the control setting as desired for welding. Do *not* change any other control. (Installation of the K200 or K224 field control is required when using motor-generator power sources to have output control at the wire feeder.)

If the electrode continues to "blast off," a slower acceleration can be obtained by modifying the LN-8 (Codes 7926 and up) as follows:
1. Turn off the control power to the LN-8 at the power source.
2. Remove five screws holding the control section cover in place and swing upward.
3. Move the jumper plug on the control P.C. board from pin "F" to "S".
4. Reassemble.

November 1990

NOTES

LOADING THE MACHINE

⚠ WARNING

HIGH VOLTAGE can kill.

- Do not operate with covers removed.
- Turn off power source before installing or servicing.
- Do not touch electrically hot parts.
- Turn the input power to the welding power source off at the fuse box before working in the terminal strip.

MOVING PARTS can injure.

- Keep away from moving parts.

- Only qualified personnel should install, use or service this equipment.

Sec. K3.1.8-A

Wire Reel Loading — 60 and 50 Pound (27.2 and 22.7 Kg) Reels

1. **Loading the Reel**

Be sure the drive roll pressure is properly set for the wire size being used. See Sec. K2.2.3.

a. To remove the wire reel from its shaft, grasp the spring loaded knob and pull it out. This straightens the knob so it seats into the shaft when released.

b. Lay the reel flat on the floor and remove the cover plate.

c. Place a coil of wire on the reel so it unwinds as the reel rotates clockwise.

A. Be sure the coil is placed so the spring loaded arms will not interfere with the later removal of the coil tie wires.

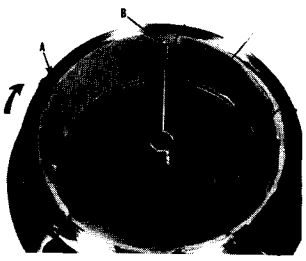

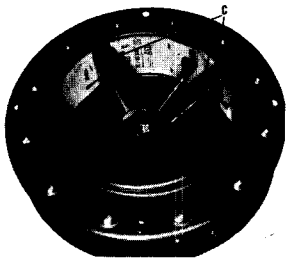

B. When loading .035, .045 and .052" (0.9, 1.1 and 1.3 mm) L-50 wire, be certain the coil is placed on the reel so the spring loaded arms are at the center of the slots in the cardboard coil liner. This provides the positive compression of the coil needed for trouble free wire feeding.

C. Put the cover plate on the reel so the four arms of the cover straddle the spring loaded arms of the reel proper.

d. Tighten the cover as much as possible by hand. Do NOT hammer on the spinner nut arms.

e. Cut and remove the tie wire holding the free end of the coil. Insert the free end into one of the holes in the cover and secure it by bending it back. Cut and remove the remaining tie wires.

NOTE: Always be sure the free end of the coil is securely held while the tie wires are being cut and until the wire is feeding through the drive rolls. Failure to do this will result in "back lashing" of the coil, which may tangle the wire and cause poor unreeling.

f. Replace the reel on the wire feeder.

2. **To thread Wire into LN-8N or LN-8S 50-60# (22.7-27.2 Kg) Reel Mounting:**

Turn the reel until the free end of the electrode is accessible. While tightly holding the electrode, cut off the bent end. Straighten the first six inches and insert the free end through the incoming guide tube. Press the gun trigger and push the electrode into the drive roll. Inch the electrode through the gun. (If the electrode is not properly straightened, it may not feed or may not go into the outgoing guide tube causing a "birdnest".)

WARNING: The electrode and drive mechanism are always "hot" to work and ground while inching with the gun trigger.

3. **To thread Wire into LN-8NE and LN-8SE (With Extension):**

Slide the ingoing guide tube of the hand crank to the forward position.

Remove start end of coil from hole in wire reel cover, straighten the first six inches or so of the wire and then insert this end into the ingoing guide tube. Push a foot or so of wire through.

Now pull the ingoing guide tube back to the rear position and rotate it 90° so that it will remain in this position during the cranking operation.

Pull the plastic hand crank handle to the out position in the arm.

Pull the shaft and drive roll assembly to the out position with the left hand.

Apply a downward pressure to the idler roll pressure arm with the right hand. Maintain this pressure and start cranking the wire thru the system. Keep the conductor cable as straight as possible during the loading operation. This will make it much easier to crank the wire through.

Sec.K3.1.8-A (Continued)

Crank until the wire touches the drive roll and then pull the gun trigger and this will start the drive rolls and feed the wire the rest of the way through the cable and gun assembly.

WARNING: The electrode and drive mechanism are always "hot" to work and ground while inching with the gun trigger.

Push the plastic of the hand crank to the "in" position, also shift the ingoing guide tube to the forward position.

The proper position for the hand crank arm, when it is not being used is shown in the sketch below. Close the wire reel door.

November 1990

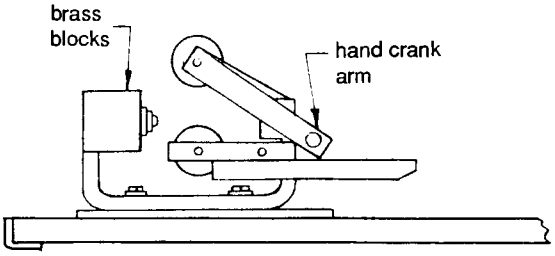

K3.1.8-B

Wire Reel Loading — Readi-Reels and to 30 Pound (13.5 Kg) Spools (K377 and K162)

To mount a 30lb. (13.5 Kg) Readi-Reel package using the formed sheet metal K363 type adapters, remove the locking collar and remove the outside Readi-Reel adapter arm.. Engage the inside Readi-Reel adapter arm in the brake driving pin and rotate the spindle until the inside adapter arm is in the vertical position. Set the Readi-Reel on the adapter arm. The Readi-Reel must be installed so that it will rotate in a *clockwise* direction when feeding (wire is dereeled from the bottom of the coil). The outside adapter arm is then to be placed on the spindle at an angle of 90° from the inside adapter and the locking collar installed. Tighten the locking collar securely.

To mount a 30lb. (13.5 Kg) Readi-Reel package using the molded plastic K363P type adapter, rotate the spindle and adapter so the retaining spring is at the 12 o'clock position.

Position the Readi-Reel so that wire will be dereeled in the proper direction for the wire feeder to be used. Set one of the Readi-Reel inside cage wires on the slot in the retaining spring tab. Lower the Readi-Reel to depress the retaining spring and align the other inside cage wires with the grooves in the molded adapter. Slide cage all the way onto the adapter until the retaining spring "pops up" fully.

WARNING: Check to be sure the retaining spring has **securely** locked the Readi-Reel in place.

To remove Readi-Reel from adapter:

Depress retaining spring tab with thumb while pulling Readi-Reel cage from the molded adapter with both hands. Do not remove adapter from spindle.

To mount 15 to 30lb. (6.8 to 13.5 Kg) spools, remove the locking collar from the 2 inch (50 mm) dia. spindle. Place the spool on the spindle making certain the brake driving pin enters one of the holes in the backside of the spool. Be certain the wire comes off the reel in a *clockwise* direction. Replace and tighten the locking collar.

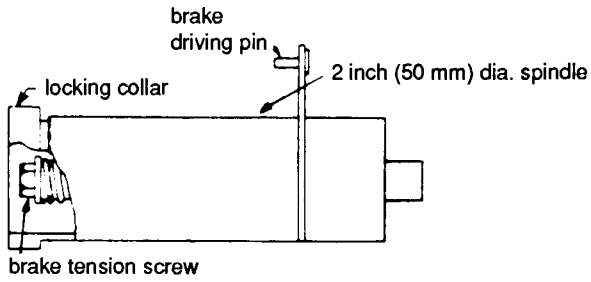

To feed the electrode, turn the Readi-Reel or spool until the free end of the electrode is accessible. While tightly holding the electrode, cut off the bent end. Straighten the first six inches (150 mm) and cut off the first inch (25 mm). Insert the free end through the incoming guide tube. Press the gun trigger and push the electrode into the drive roll. Inch the electrode through the gun. (If the electrode is not properly straightened, it may not feed or may not go into the outgoing guide tube causing a "birdnest".) Adjust the brake tension with the hex head screw or thumb screw on the spindle hub, until the reel turns freely but with little or no overrun when wire feeding is stopped.

WARNING: When inching, the electrode and wire feeding system are always "hot" to work and ground.

November 1990

Sec. K3.1.8-C

Wire Reel Changing

Generally with most LN-8 installations the end of the coil can be removed from the gun cable by either laying the gun and cable out straight and pulling the electrode end out through the nozzle or by reversing the wire feed direction and pressing the gun trigger.

WARNING: The electrode is electrically "hot" to work and ground when inching. Be sure the free end of the electrode is kept from touching the work or any part of the ground system as it is fed back out of the wire feeder.

With the LN-8NE or LN-8SE extension unit, use the following procedures to remove the end of the coil from the gun cable:

1. Cut the end of the electrode off at the gun end. Do not break it off because this puts a slight kink in the wire and makes it difficult or impossible to back it through the nozzle.
2. Uncouple the gun cable from the LN-8 wire drive unit.
3. Lay the cable out straight.
4. Grip the electrode with pliers and pull it out of the cable from the connector end. (Older K112 cables have a removable liner. This liner may tend to slide out with the electrode. If this happens, remove the electrode from the liner and replace the liner in the cable.)
5. Load a new reel as described in Sec. K3.1.8-A or K3.1.8-B.

November 1990

LOADING THE MACHINE — CONT'D

Sec. K3.1.10
Flux Tank Loading

1. **Flux Tank (Optional)**

Either turn off the incoming air line or remove the quick disconnect if one has been installed. Slightly loosen the tank cap and let the air in the tank escape through the holes in the side of the cap. After pressure has been released, remove cap from the tank. Using the funnel provided, put 100 pounds (45 Kg) of flux into the tank. It is very important that only new or properly reclaimed flux be put in the tank. Coarse particles and/or magnetic particles will stop the flux feeding process. New Lincoln flux is properly screened at the factory. All reclaimed flux must be separately screened through a vibrated screen having .065 — .075" (1.6–1.9 mm) openings and be put through a magnetic separator. The K310 vibrated screen and K58 Magnetic Separator are available for this purpose. The screen in the funnel supplied with the tank has much larger openings and its only purpose is to keep paper and slag out of the tank. Screw the tank cap back on and tighten hand tight. Reconnect the incoming air line to the tank.

There will always be a small amount of air and possibly drops of water coming out of the end of the tube coiled under the tank. This is an automatic disposal system in case the plant air has water and dirt in it.

2. **Magnetic Separator (Optional)**

The K58 is a permanent magnet type separator designed to fit the top of the standard fill funnel of the continuous flux feed system of the top of the K219 flux hopper of a full automatic head.

The purpose of the separator is to remove magnetic materials such as mill scale and any other extraneous magnetic materials which may have been recovered along with the flux to be processed.

It is important to remove these magnetic particles from the flux which is to be reused in the continuous flux feeding system. If the magnetic material is not removed it will gather around the nozzle of the gun and impede or shut off the flux flow when making relatively long welds or welding continuously. The magnetic particles can also cause porosity in the weld.

Fit the magnetic separator into the funnel or hopper. Pour the flux to be reclaimed into the top pan of the separator. The separator is designed so the flux flows around three permanent magnets. The magnets remove all magnetic particles. When the magnets become covered with their full load, they automatically stop the flux flow. When the flux flow stops, remove the separator from the funnel or hopper. Turn it over and open the panel that covers the magnets. Remove the magnetic particles with brushing or an air blast. Be careful to protect yourself and others in the area from flying particles.

The magnetic separator is used with all Lincoln mild steel flux — 760, 761, 780, 781, 860, and 880. Do not use the magnetic separator with any stainless steel, alloy, or hardsurfacing flux except H535. The magnetic separator removes some of the alloying elements from these fluxes thus changing their characteristics.

3. **K310 Screen (Optional)**

The unit was designed to fit the top of either the standard fill funnel of a continuous flux feed system or a K58 magnetic separator. The unit has a steel screen with .065 to .075 (1.6 to 1.9 mm) openings and an air vibrator attached to the frame. The vibrator can be used with air line pressures ranging from 20 psi thru 100 psi (137 thru 689 kPa).

For ease of handling, the user should connect the incoming air line to the 1/8" (3.2 mm) pipe elbow with the aid of a fast disconnect type air coupling.

It is very important that reclaimed flux to be used in the continuous flux feeding system be passed through the K310 screen or its equivalent.

November 1990

⚠ WARNING

ELECTRIC SHOCK can kill.	• Do not touch electrically live parts or electrode with skin or wet clothing. • Always wear dry insulating gloves. • Insulate yourself from work and ground.
FUMES AND GASES can be dangerous.	• Keep your head out of fumes. • Use ventilation or exhaust to remove fumes from breathing zone.
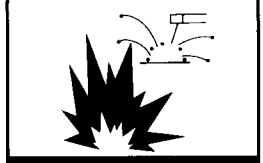 WELDING SPARKS can cause fire or explosion.	• Keep flammable material away. • Do not weld upon containers which have held combustibles.
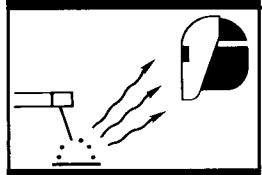 ARC RAYS can burn.	• Wear eye, ear and body protection.

Sec. K3.2.3
(File as Sec. N4.4.15 in IM-294)

MAKING SUBMERGED ARC WELDS

Gun Operating Positions: K114 Squirtgun

The K114 Squirtgun is used either with or without the mechanized hand travel unit (K110). With the LN-6, LN-8 and LN-9 a K161 "Mechanized Travel Power Pack" must be installed when using the K110. Since the travel unit assures uniform travel at the maximum usable speed and reduces the tendency to waver off the seam, it is recommended for most applications. The following photographs show suggested gun positions to produce the best welds in the least time. For proper flux feeding these same positions should be maintained when the gun is hand held and the mechanized travel is not used.

Figure 1 and Figure 2

Travel Unit Adjusting

Loosen the motor mounting wing nut to adjust the travel unit (Figure 1). Move the travel unit up and down or around the gun nozzle to suit different welding applications (Figure 2). Pull the motor controlled plug out to remove the travel unit from the gun.

90No

Flux Depth

The depth of the flux pile is controlled by the gun height. Gun height is measured from the lower tip of the nozzle flux cone to the plate. Proper gun height is the height at which a minimum of flux is used without excessive arcing. As a general rule the required gun height increases as the travel speed decreases and the voltage and current increase.

On some fillet welds a drag technique without the travel unit is used. In this instance the amount of flux is controlled by the internal diameter of the nozzle flux cone. For sufficient flux on some applications, use the nozzle flux cones with larger I.D.

Travel Speed

Set the speed of travel with the rheostat on the mechanized travel unit. Speed range is 7 to 60 inches per minute (0.2 to 1.5 m/min), but will vary with AC input variations. Operate the toggle switch on the unit to change direction of travel.

The K161 Power Pack has a pod which is mounted to the front of the LN-8 and LN-9. To set an exact travel speed turn the switch on the pod (or the 'Weld Travel Only' switch on LN-4 or ML-3 machines) to "on" (or to 'Travel Only'). This turns the travel motor on without energizing the welding circuit. Adjust the speed dial until you have the exact speed set. Return this switch to the "off" position and you are ready to weld. **NOTICE:** Be sure this switch is set on "off" when plugging in the travel motor or conductor cables.

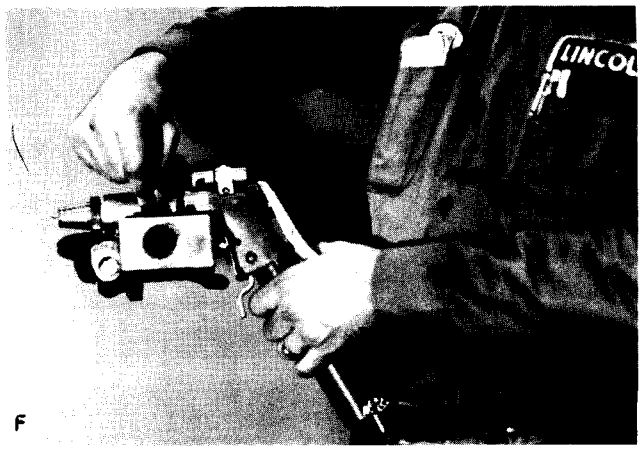

F

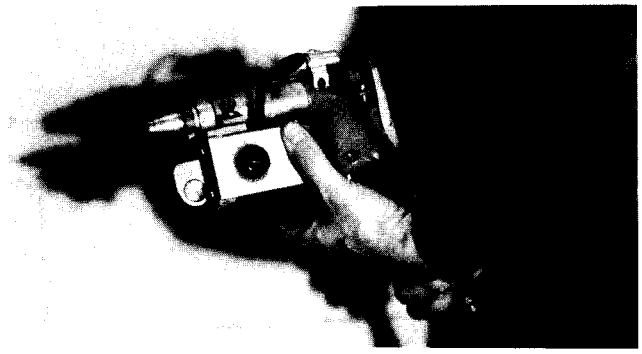

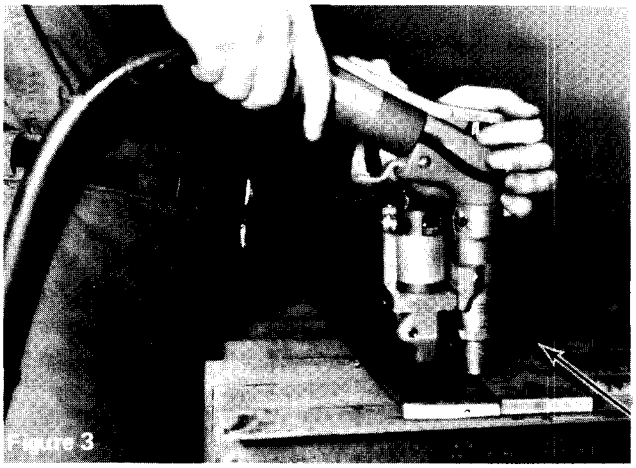
Figure 3

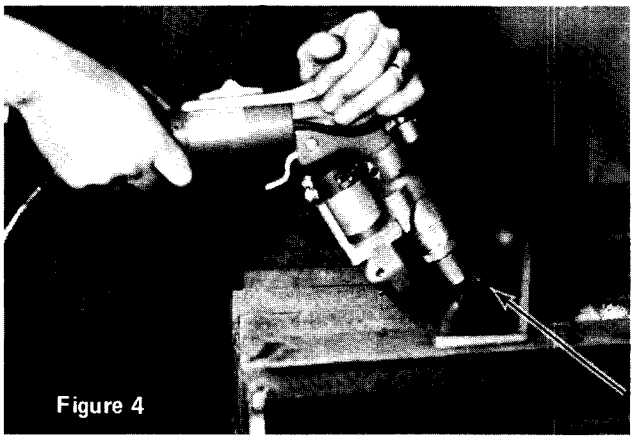
Figure 4

Figure 5

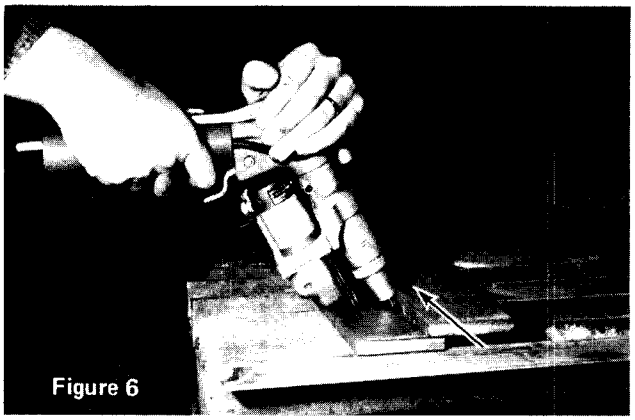
Figure 6

Figure 3

Butt Weld — Arrow shows direction of travel.
Position the gun over the seam so the electrode feeds directly into the seam and the gun nozzle is perpendicular to the plate. Swing the gun handle horizontally to a comfortable position for welding. Be sure the travel drive wheel is parallel to the seam.

Operate the gun trigger to open the flux valve, start the travel and start the arc.

Guide the gun with two hands. Place one hand on the gun to steady it. Place the other hand on the cables just back of the gun handle. When making the weld, lean the gun slightly forward into the direction of travel. Let the weight rest on the drive roll. Let the travel unit do the work.

Figure 4 and Figure 5

Horizontal Fillet Weld — Arrow shows direction of travel.
Position the gun so the electrode feeds directly into the corner of the seam. Do this with the electrode sticking out and the flux valve closed. This position is usually obtained when the gun handle is approximately perpendicular to the vertical plate. Once the correct angle is established, guiding is accomplished by keeping the flux cone lightly in contact with the vertical plate. Be sure the travel guide wheel is parallel to the seam.

Operate the gun trigger to open the flux valve, start the travel and start the arc.

Guide the gun with two hands. Place one hand on the gun to steady it. Press down lightly with this hand to increase the weight on the drive roll. Place the other hand on the cables just back of the gun handle. When making the weld, lean the gun slightly forward into the direction of travel. Let the weight rest on the drive roll. Let the travel unit do the work.

Figure 6

Horizontal Lap Weld — Arrow shows direction of travel
The above horizontal fillet weld instructions also apply in making horizontal lap welds. However, since there is no vertical plate to lightly hold the cone against, keeping the proper electrode angle must be done by eye.

Sec. K3.2.3 (Continued)

Figure 7

Positioned Fillet Weld

Attach the positioned fillet adapter. Rotate the travel unit and adapter so the drive wheel rides in the seam ahead of the weld. Position the gun with the gun nozzle perpendicular to the seam. Guide the gun with two hands. Tilt it slightly forward in the direction of travel when making the weld.

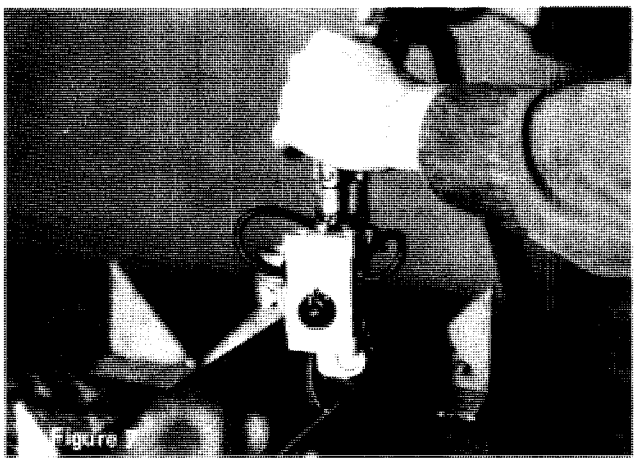

Sec K3.2.4

Fillet Guide (Optional): K70

The Fillet Guide is designed to help guide Squirtgun K114 so the operator can make more uniform horizontal fillet welds with less effort. It consists of a vertical plate roller guide and a rear wheel assembly. Once the roller guide and rear wheel are adjusted, the weld is easily made by gently pushing the gun into the fillet. The operator does not have to constantly control the drag of the flux cone against the vertical plate nor carefully watch the angle of the gun.

1. **Installation: Squirtgun K114**

   Fit the vertical plate roller guide directly on the gun nozzle.

   Clamp the rear wheel to the gun as shown in the sketches. Use of the rear wheel requires a riding surface under the handle 7 to 11 inches (180 to 280 mm) from the vertical plate. Exact location of the rear wheel is not critical. However, the greater distance provides better stability and ease of operation. Even if the horizontal surface is not available, using the roller guide without the rear wheel still aids in making fillet welds.

   If the nozzle extension used with long stickout procedures is installed, replace item 15 with the long guide roll arm, item16. This is shipped loose with the fillet guide kit. See following drawing M9715A-B.

2. **Operation**

   After the Fillet Guide is installed with the rear wheel placed as required for the application (see "Installation"), proceed as follows:

   a. Position the travel unit so the nozzle flux cone is at the right height to deposit enough flux to cover the arc.
   b. Inch the electrode out so the point will just miss touching the plate when the gun is held in the proper position for welding. The electrode end should slightly favor the horizontal plate. The nozzle flux cone should miss the vertical plate by about 1/32" (0.8 mm). The gun handle must be 90° to the vertical plate when looking down from above. Be certain the electrode has not been bent when making these adjustments.
   c. Hold the gun in proper position for welding. Lower the rear wheel until it touches the horizontal plate. Lock it into position. The adjustment range of the rear wheel can be increased by moving the wheel from position "A" to "B". If using the nozzle extensions for long stickout procedures, replace item 15 with the long guide roll arm, item 16.
   d. Slip the roller guide down until the two small rollers touch the vertical plate. Lock it in position. The nozzle flux cone should never drag on the vertical plate when welding. The roller guides and rear wheel should be parallel to the travel unit drive wheel.

      If the fillet angle varies from one weld to another, readjustment of the roller guide may be necessary. For example, assume the Fillet Guide was adjusted for an angle of 90°. If the fillet angle of the next weld is 95°, the cone may drag on the vertical plate. Readjust the roller guide.
   e. Recheck the electrode alignment after tightening the guides and before making the welds. When welding, apply slight pressure down and forward on the gun. This insures contact of guide wheels and the drive wheel with the plates.

P-165 — K-110 Mechanized Hand Travel Unit

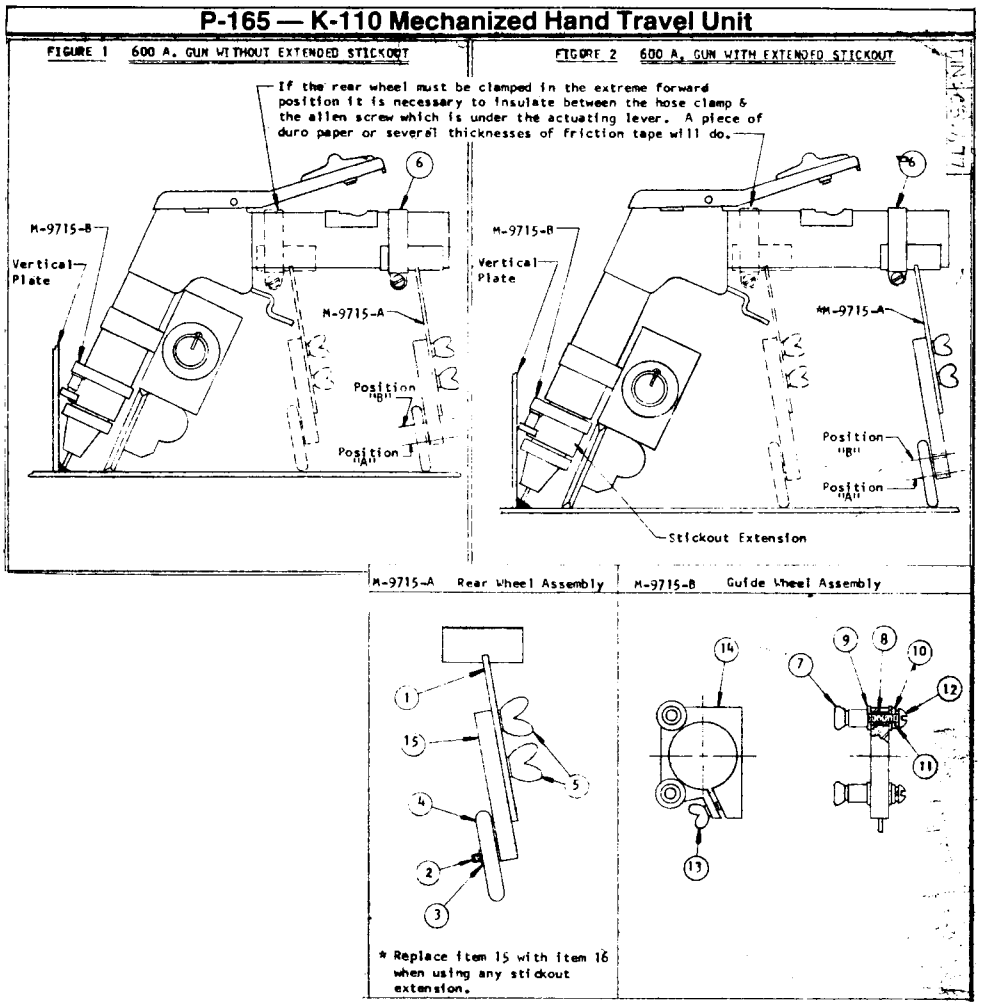

Parts List P-165

Item	Part No.	Description	Req.
1	T11690	Wheel Holder Asbly.	1
2	T9447-22	Socket Hd. Screw	1
3	T8892	Guide Roller	1
4	T11692	Rubber Tire	1
5	T9078-1	Wing Screw	2
6	S10888-16	Clamp	1
7	T11695	Guide Roll Asbly.	2
8	T6675-2	Insulating Tube	2
9	S10773-35	Insualting Washer	4
10	S9262-27	Plain Washer	2
11	E106-A-1	Lockwasher	2
12	#10-24 x 7/8	Round Head Screw	2
13	T9078-3	Wing Screw	1
14	S-11867	Guide Roll Holder	1
15	T11688	Short Guide Roll Arm	1
16	T11688-1	Long Guide Roll Arm	1

SEC. K6.1 — WIRE DRIVE AND CONTROLS MAINTENANCE

⚠ WARNING

- **Have an electrician install and service this equipment.**
- **Turn the input power off at the fuse box before working on equipment.**
- **Do not touch electrically hot parts.**

HIGH VOLTAGE can kill.

WARNING: Turn off power source before installing or changing drive roll and/or guide tubes.

Sec. K6.1.1
Drive Rolls and Guide Tubes

After every coil of wire inspect the drive rolls and guide tubes and clean as necessary. The drive rolls can be brushed with a wire brush. Do not use a solvent on the outside drive roll as it may wash the lubricant out of the drive roll bearing.

The drive rolls and guide tubes are stamped with the wire size for which they are designed. If a wire size other than that stamped on the drive roll is to be used, the drive rolls and guide tubes may have to be changed. See the parts List Sec. K7.3, page G, in the back of this manual for the necessary parts.

The inner drive rolls for .068 thru .120" (1.7 thru 3.0 mm) wire have a double set of teeth so they can be reversed for additional life. Between the two knurled rolls is a shim washer which limits the damage to the wire to a minimum should wire feeding problems occur. When drive rolls are interchanged, leave the three socket head screws of the roll assembly loose until it is re-assembled on the drive shaft. Then tighten all three. **Be sure the roll faces and spacer faces are thoroughly cleaned before re-assembly.**

Drive rolls for 1/6" (1.6 mm) and smaller wire have no teeth. They are not reversible.

November 1990

Sec. K6.1.2
Wire Drive Motor and Gear Box

Every year examine the gear box. Coat the gear teeth with moly-disulfide filled grease. Do not use graphite grease.

Check the motor brushes. Replace if they are worn down to 1/4" (6.4 mm) or less. When ordering feed motor brushes, give all information from the motor nameplate.

November 1990

Sec. K6.1.3
Wire Reel Assembly For 50 & 60 Pound (22.7 & 27.2 Kg) Coils

To prolong its life, periodically coat the reel shaft with a thin layer of grease. No maintenance on the brake assembly is required. If the brake shoe wears through to metal, replace the brake assembly.

November 1990

Sec. K6.1.4
Control Box

Every six months open and inspect the control section. The accumulated dirt should be gently blown off all of the electrical components. Be sure the air that is being used is dry. Check relay contacts.

August 1973

Sec. K6.1.5
Circuit Protection

Field Circuit Fuse
The fuse inside the control box protects the field circuit. This fuse blows if the field shorts or if one of the field circuit components on the relay P.C. board fails.

Motor Thermal Protection
The temperature sensing thermal protector mounted in the motor opens the relay circuit when the motor overheats because of excessive loading or frequent triggering. This protects the motor without nuisance tripping. The thermal protector automatically resets itself after the motor cools sufficiently (may take 10-15 minutes). Reset time can be shortened by cooling the motor with an air hose or fan.

Circuit Breaker
The 5 amp circuit breaker located above the drive rolls normally trips only when an overload occurs because of excessive loading in the wire feed cable or a defective motor or control component. After allowing a minute for cooling, push the reset button and weld. If it trips again, be sure the wire feed cable is clean and the proper size for the wire diameter being fed. If it still trips, look for a defective electrical component.

Grounding Lead Protector
The frame of the LN-8 wire feed unit and the drive motor are grounded to the frame of the power source by a lead in the control cable. An overload protector prevents welding current from damaging this lead if the electrode circuit touches the wire feeder frame while the gun trigger is pressed.

When the protector is tripped, the welding contactor in the power source will not close when the gun trigger is pressed. As a result:

1. When set for constant current welding (most submerged arc), the LN-8 wire feed *rolls will not turn*, and the arc will not strike.

Sec. K6.1.5 (Continued)

2. When set for constant voltage welding (open arc), the wire feed rolls turn but the *arc will not strike.*

To locate the protector reset button, open the door covering the wire drive roll section and look for the round white button above the wire feed motor. Push the button in to reset. If the button does NOT move when pushed, the protector is set and ready for welding.

Avoiding Shutdowns Caused by the Grounding Lead Protector Being Activated

Do not allow the electrode to contact the case of the wire feeder or uninsulated part of its wire reel stand when the gun trigger is activated.

Be sure that all work lead connections to the work make tight metal-to-metal electrical contact.

Do not allow excess electrode cable or work cable that is coiled up to be placed closer than three feet to the wire feeder. The magnetic field that is generated by welding current going through the coiled cable can falsely activate the GLP.

November 1990

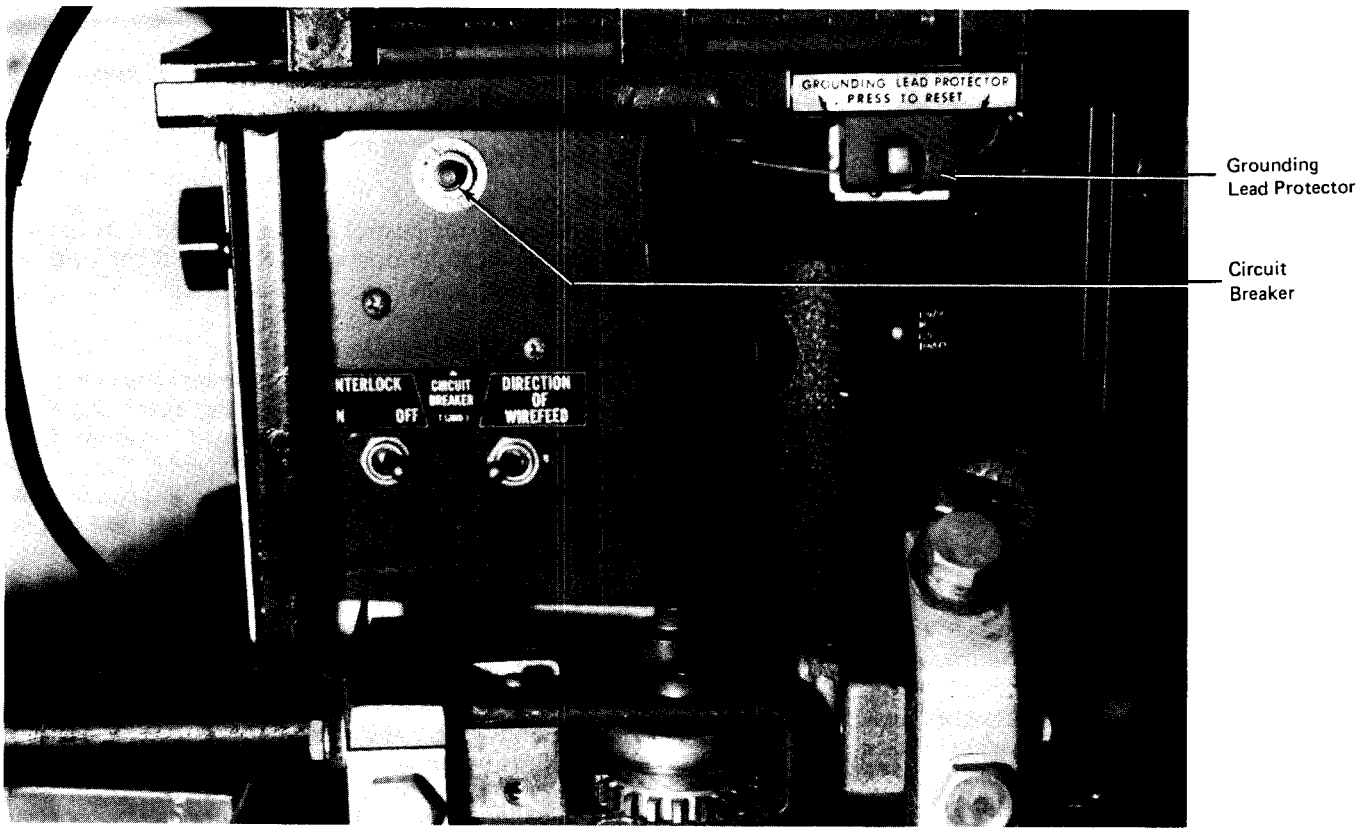

SEC. K6.2 — GUN CABLE, GUN AND HAND TRAVEL KIT

NOTE: Always replace the gun contact tip when it becomes badly grooved.

WARNING: Before any gun is serviced or disassembled remove it from the wire feeder, or turn off the power source.

Sec. K6.2.1
Gun Cables (All)

A dirty gun cable can cause rough and erratic wire feeding. Therefore, the cable liner must be cleaned periodically. Clean Innershield gun cables after using approximately 300 pounds (136 Kg) of electrode; clean submerged arc gun cables after using approximately 600 pounds (272 Kg) of electrode.

Remove the cable from the wire feeder. Lay it out straight on the floor. Remove the contact nozzle tip from the gun. Using an air hose and only partial pressure, gently blow out the cable. Work the full length of the cable by bending it back and forth and then blow it out again. Repeat this procedure until no more dirt comes out.

November 1990

Sec. K6.2.2
Gun Disassembly

"Innershield" Squirtguns K115 and K126 and Submerged Arc Squirtguns K113 and K112

To remove the nozzle from the gun, loosen (do not remove) the 1/4-20 socket head screw in the gun handle with a 3/16" (4.8 mm) Allen wrench and pull the nozzle straight out. To reinstall, insert the nozzle into the gun handle. Push it in as far as possible and tighten the socket head screw.

Remove the cable from the wire feeder. To disassemble "Innershield" Squirtguns K115 and K126, first loosen the four screws which hold the heat shield in place. Remove the heat shield.

To disassemble the switch housing from all guns, remove the four screws holding the saddle around the gun handle.

Then hold the housing with the cable toward the floor and look into the switch cavity. The tight side of the larger roll pins is to the right. Drive these pins to the left. They can be easily removed when they clear the right side of the casting. Do not remove the smaller roll pins unless the trigger is being replaced. The height of the Z spring controls the operating point of the switch with respect to the trigger movement. Set the spring so the switch operates at about the mid-point of the trigger travel.

To remove the handle from the cable, slip the spatter shield out of the front of the handle. Loosen the 1/4-20 socket head screw in the side of the handle. Remove the snap ring. The handle and connector clamp can then be slipped off the cable.

November 1990

Sec. K6.2.3
Gun Disassembly

"Innershield" Squirtgun K116

Remove cable from the wire feeder. Remove the pistol grip assembly from the gun by removing the four screws which clamp the assembly to the handle.

To disassemble the switch, remove the one screw which holds the housing in the pistol grip handle. Slip the aluminum housing out of the handle. Hold the housing with the leads toward the floor and look into the switch cavity. The tight side of the larger roll pins is to the right. Drive these pins to the left. They can be easily removed when they clear the right side of the casting. Do not remove the smaller roll pins unless the trigger is being replaced. The height of the Z spring controls the operating point of the switch with respect to the trigger movement. Set the spring so the switch operates at about the midpoint of the trigger travel.

To remove the handle from the cable follow the instructions in the last paragraph of Sec. K6.2.2.

August 1973

Sec. K6.2.4
Gun Disassembly

Submerged Arc Squirtguns

Remove the cable from the wire feeder. To disassemble the gun from the conductor cable proceed as follows (refer to Sec. K7.2, page E):

1. Be sure the air is off and the pressure is released from the tank.
2. If the gun still has filler wire in it, clip the end of wire and back the wire out of the gun.
3. Loosen the screw holding the travel receptacle clamp (item 8). (Do not remove the nut from the screw.) This will allow the clamp and the travel plug to swing free.
4. Loosen the electrical connection clamping screw (item 33).
5. With the trigger bar (item 10) in the off position, grasp the gun tube (item 5) in one hand and the cable handle (item 28) in the other. Pull the two units apart using a slight back and forth motion.

To disassemble the gun proceed as follows:

1. Using a pair of needle nose pliers, lift the end of the spring (item 9) out of the hole in the trigger bar (item 10).
2. Loosen the gun tube clamping screw (item 3), and remove the gun tube. A slight back and forth twisting action will help.

Sec. K6.2.4 (Continued)

3. Remove both the screws (item 21) which hold the two plastic halves together. After these screws have been removed, the left and right gun mounts (items 6 and 11) can be separated and the remaining parts, the nozzle (item 4), gun hanger (item 18), and the flux tube assembly (item 7) can be removed.

To disassemble the gun handle from the cable proceed as follows:

1. Remove the flux hose from the gun.
2. To remove the flux tube (item 29) take out the two flat head screws (item 32). The flux tube can then be removed by pulling it straight back. Be careful not to damage the ends of the tube.
3. To remove the cable (item 31) from the handle, take the snap ring (item 34) off the end of the brass connector. With the clamping screw (item 33) loose, the cable (item 31) can then be pulled back out of the handle.
4. Remove the switch, remove the three round head screws (item 37). This will allow the switch mounting plate (item 36) to be removed from the fiber handle. Remove the two small screws (item 40) which hold the switch to the plate. The leads that go to the switch can then be unsoldered.
5. To remove the clamping ring (item 26) from the handle, remove the screw (item 35) and tighten the clamp screw (item 33). The clamping ring may then be removed from the handle.
   To reassemble the unit, follow this procedure in reverse.

When finished with the reassembly, make certain that the electrical connection locking screw (item 36) is loosened before assembling the gun and then retightened before attempting to weld.

September 1979

Sec. K6.2.5

Gun Nozzles (All)

1. Replace worn contact tips as required.
2. On Innershield guns, remove spatter from tip or extension guide after each ten minutes of arc time or as required.
3. Replace worn spring liners in nozzles. The life of the liner can be doubled by rotating liner 180°. The liner can be pulled out of the back end of the nozzle by wedging the blade of a small screwdriver in the I.D. and pulling.
4. Inner parts of nozzles can be removed and replaced by removing the internal hollow-lock set screw from the contact tip end of the nozzle with a 5/32 or 3/16" (4.0 or 4.8 mm) Allen wrench.

The insert and retainer will normally fall out of the end of the nozzle but if they do not, gently drive the spring liner towards the outgoing end of the nozzle.

See appropriate parts list page for construction details and replaceable parts. For guns using similar nozzles for different wire sizes, note the identifying wire size that is stenciled-or-molded-in an area close to the incoming end.

When re-assembling nozzle, make certain the ceramic nozzle insert (if used) is placed next to the spring liner. The hollow-lock set screw is to be tightened to give the dimension specified below as measured from the end of the nozzle to the hollow-lock set screw.

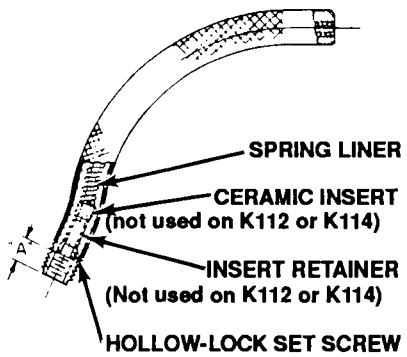

Gun	"A"
K112 (500)	.38
K113	.38
K114	.38
K115	.75
K116	.75
K126	.38
K206	.38
K289-5/64" (2.0 mm)	.44
K289-3/32 & .120" (2.4 & 3.0 mm)	.75
K309	.38

November 1990

Sec. K6.2.6

Hand Travel Unit (K110)

Check the lubrication in the gear box every three months. If the motor worm and its worm gear appear dry, wipe a thin coating of a good non-fluid grease (equivalent to Clark Oil Co. Sea Gull Speed Reducer Lubricant) on each. Do not add too much or the motor will be overloaded. Lubrication for this first reduction must be by spatter and drip, not by running in a pool of grease.

Once each year flush the gear box out and relubricate. To do this remove both the output shaft assembly and the motor assembly. Flush the box with a good solvent. Force fresh grease through the output shaft opening. Do not put grease through the motor mounting side. Use about 0.6 of a cubic inch (9.8 cc) of grease. This is a pad 1/2 inch (25 mm) in diameter by 3 inches (75 mm) long. Replace the output shaft assembly. With a wire or screw driver work the grease around the input worm gear to apply a thin coat of grease to this gear. Replace the motor assembly.

Check the travel motor brushes every three months.

November 1990

SEC. K6.4 — TROUBLESHOOTING

⚠ WARNING

ELECTRIC SHOCK can kill.

- Do not operate with covers removed.
- Turn off power source before installing or servicing.
- Do not touch electrically hot parts.
- Turn the input power to the welding power source off at the fuse box before working in the terminal strip.

MOVING PARTS can injure.

- Keep away from moving parts.

- Only qualified personnel should install, use or service this equipment.

Sec. K6.4.1

LN-8 Troubleshooting Guide

TROUBLE	CAUSE	WHAT TO DO
1. Drive rolls turn but wire will not feed or wire feeding is rough or uneven.	a. Gun cable kinked and/or twisted b. Wire jammed in gun and cable. c. Incorrect drive rolls and guide tubes. d. Gun cable dirty. e. Worn drive rolls. f. Electrode rusty and/or dirty. g. Worn nozzle liner. h. Partially flashed or melted contact tip.	a. Keep as straight as possible. Inspect cable and replace if necessary. b. Remove wire from gun and cable — feed in new wire. Note any obstruction. Replace gun and cable if necessary. c. Be sure the wire diameter being used is stamped on drive rolls and guide tubes. Replace if necessary. d. Clean per Sec. K6.2.1. e. Replace or reverse split drive roll type. f. Replace the electrode if it is rusty. If conditions are extremely dirty or electrode is old (solid wire only) put a wiper on the wire before it enteres the guide tube. Use a piece of cloth or felt saturated with "Pyroil B" held around the wire with a light clamp. g. Replace nozzle liner. h. Replace the contact tip.
2. Variable or "hunting" arc.	a. Contact tip worn or incorrect size. b. Worn or undersize work cables or poor work connections. c. Loose electrode connections.	a. Replace contact tip. b. Inspect — repair or replace as necessary. c. Be sure the following connections are tight: electrode cable to wire feeder and power source, work cable to power source and work, gun cable to wire feeder contact block, gun nozzle to body, and contact tip to nozzle.
3. Poor arc striking with sticking or "blast-offs", weld porosity, narrow and ropey looking bead or electrode stubbing into plate while welding.	a. Improper procedures or techniques.	a. See Sec. K3.2, "How to Make Submerged Arc Welds" (S604) or "Innershield Production Welding Guide" (N675).

Sec. K6.4.1 (Continued)

TROUBLE	CAUSE	WHAT TO DO
4. LN-8 circuit breaker trips or motor thermostat opens while welding. (Also see Sec. K6.1.5).	a. Motor overload. b. Field fuse blown. c. Electrical problems.	a. See Problem 1 and correct trouble. b. Replace fuse. c. Contact Lincoln Field Service Shop.
5. No welding current. Cannot establish arc. (Wire feed motor runs and feeds wire.)	To find cause, pull gun trigger and determine whether contactor is operating. a. If the contactor is not operating. b. If the contactor is operating, check the voltage across the output terminals of the welder.	a. Look under "Grounding Lead Protector" in Sec. K6.1.5. b. If voltage is present, check welding cable for an open circuit. If voltage is not present, check the troubleshooting guide of power source in question.

September 1980

Sec. K6.4.4

Flux Feeding (Submerged Arc)

TROUBLE	CAUSE	WHAT TO DO
1. Flux flow stops while welding. If there is flux in the hose right behind the gun (test by squeezing), the stoppage is in the gun.	Flux tube in the gun may be blocked. Magnetic particles may cause bridging at the nozzle tip. Bridging only occurs when welding.	Remove the gun from the cable. Check the tube in the gun and the cable handle. Pass flux over a magnetic separator when filling the flux tank.
2. Flux stoppage not in the gun. (Be certain there are no kinks or collapsing of the hose.)	There may be a piece of slag in the hose. Flux tank outlet may be clogged. Pressure in the tank may be set improperly.	Work back along the hose squeezing it until flux can be felt. Shake the hose and feel for slag at this point. Blow out hose with air if necessary. If there is no flux in the hose, check the tank outlet for large pieces of slag or paper. Set pressure regulator for 30lbs./sq. in. (206KPa). Set pressure for 45lbs./sq. in. (310KPa) with 1/2" (12 mm) I.D. hose and 55lbs./sq. in. (379KPa) with 3/8" (37 mm) I.D. hose when using a gun cable extension assembly (LN-8NE, LN-8SE). Check screen (29) in fitting (28) at top of flux tank. (See Sec. K7.3, Page T.) If screen is clogged tank may not have proper pressure even when gauge reads O.K. (Tanks manufactured prior to 1/80 have screen at bottom of tank.)
3. Excessive air blow and uneven flux flow from the gun.	Tank may be almost empty. (May look like the tank is full at the sides but it will be down to the bottom in the center.) Flux may be fallingaway from the weld faster than it is being fed. Pressure in the tank may be too high.	Refill the tank. Alter procedure or make a flux dam. Set pressure regulator as specified in 2.
4. Flux in tank gets wet.	There may be too much water in the air line. The copper bleeder may be clogged.	If too much water goes into the water disposal system, the overflow goes into the tank. It is possible to get this much water from air lines when first starting in the morning. Blow out air lines before connecting them to the tank. Be certain that a slight amount of air is escaping from the crimped end of the copper tube below the flux tank.

November 1990

SEC. K6.7 LN-8 ELECTRICAL SEQUENCE OF OPERATION

LN-8 SEQUENCE OF OPERATION

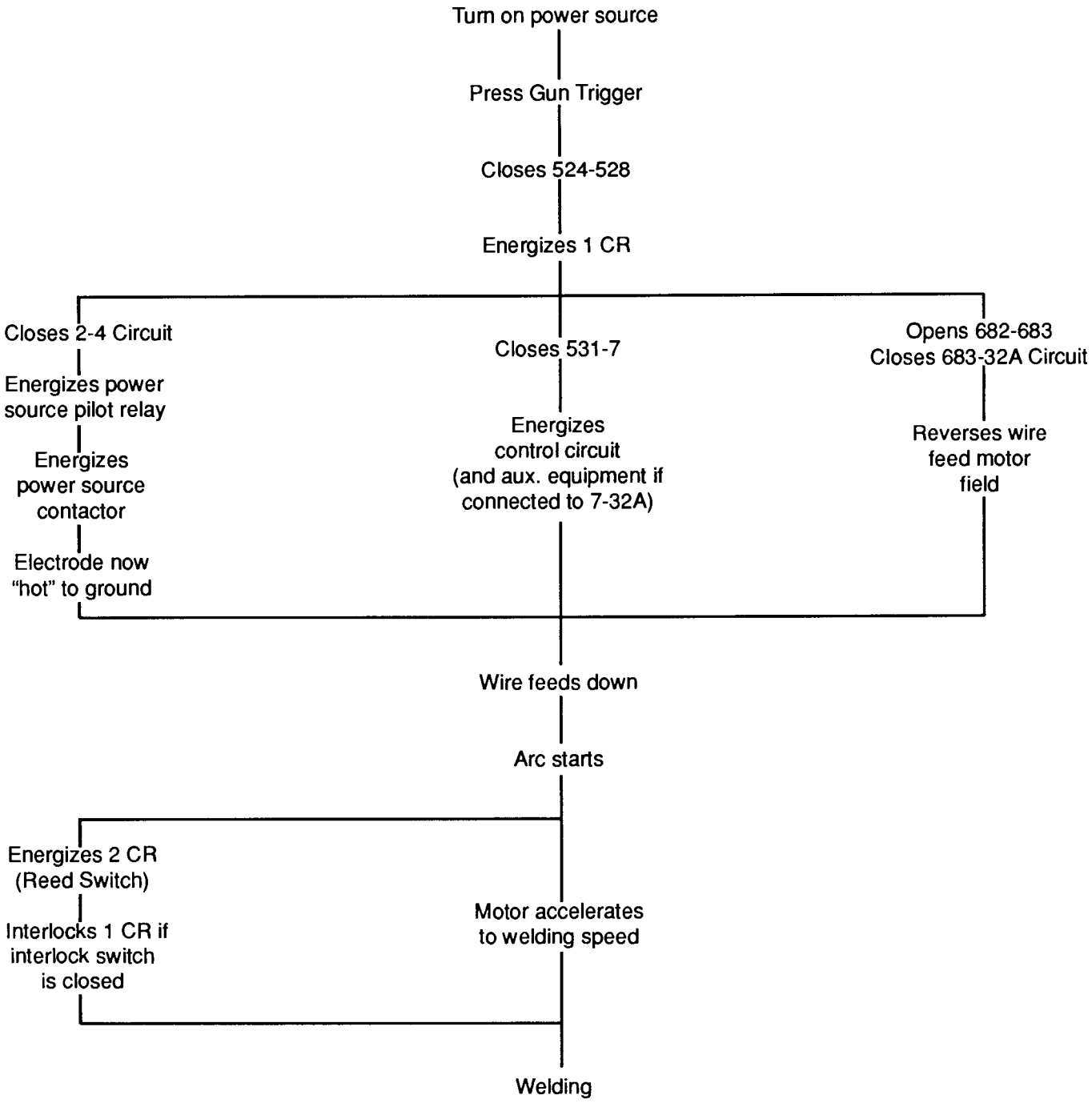

Continued on next page

Sec. K6.7 (Continued)

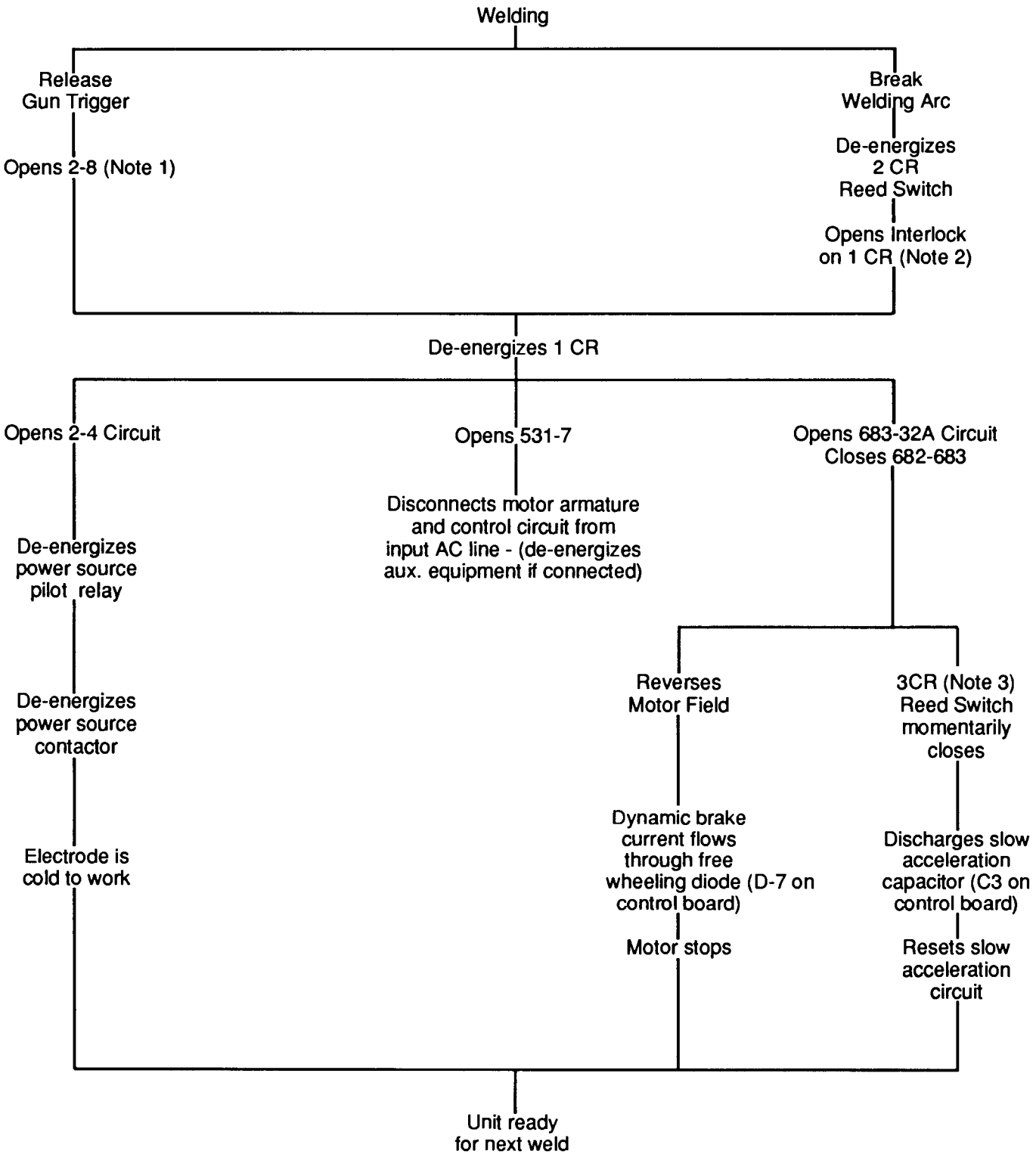

NOTE 1: When Interlock is open.
NOTE 2: When Interlock is closed.
NOTE 3: 3CR is not used on units with Code No.7926 and up.

SEC. K7.1 — PARTS LIST INDEX

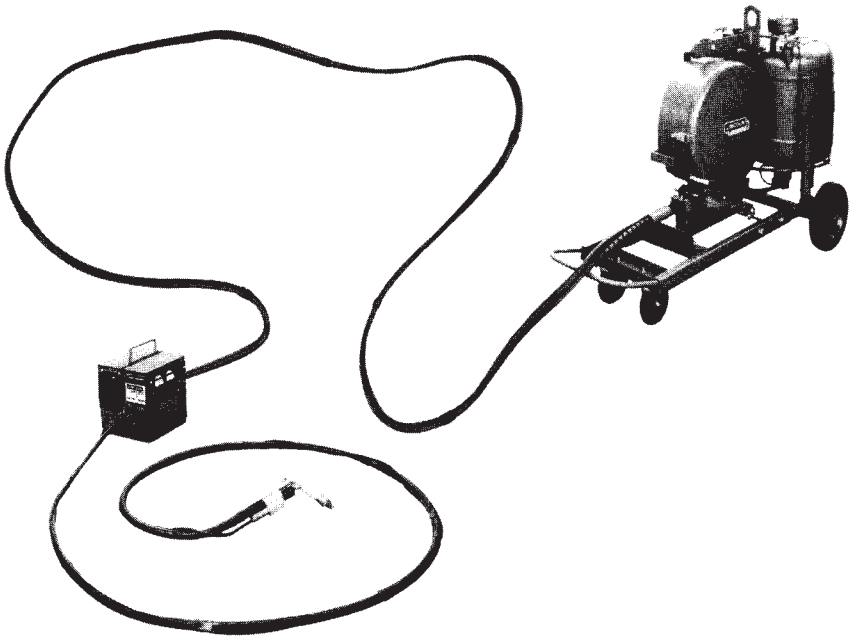

Squirtgun and Cable Assemblies — **Page No.**

K112 and K113 Squirtguns and Cables P-103-C, C.1
Gun Assembly — Squirtguns K112 and K113 ..... P-103-D, D.1
K114 Squirtgun and Cable P-103-E, E.1, P-103-E.2
K115 Squirtgun and Cable P-103-F, F.1
K116 Squirtgun and Cable P-103-G, G.1
K116 Squirtgun Handle and Control Cable P-103-H, H.1
K126 Squirtgun and Cable P-103-J, J.1
Trigger and Control Cable Assembly P-103-K, K.1
K470 and K471 Magnum™ Gun and Cable Assembly P-202-C, C.1, C.2, C.3 C.4, C.5, C.6

LN-8 Wire Feeders and Options

Wire Feed Unit (Except LN-8F) P-110-C, C.1
Instrument Panel (All Models) P-110-D, D.1
LN-8F General Assembly (Below Code 7575 Only) P-110-E, E.1
LN-8F General Assembly & Instrument Panel (Above Code 7575 Only) ..... P-110-F, F.1, G, G.1
Wire Drive Motor and Gear Box P-107-F.2, F.3
Wire Drive Mechanism P-107-G, G.1
K165 Ammeter-Voltmeter Kit (Below Code 7575 Only) P-107-J
K207 Wire Feed Speed Meter-Voltmeter Kit (Below Code 7575 Only) P-107-L
Input Cable and Extension (LN-8SE and NE) Cable P-107-M
50 and 60# Wire Reel Support P-107-O, O.1
K377 Stand Assembly for Readi-Reel P-125-N, N.1
K378 Stand Assembly for 14 Pound Reel P-125-O, O.1
Wire Reel Shaft P-107-P
Hand Crank Assembly P-107-R
Flux Tank (LN-8S and 8SE) P-107-S, S.1
Undercarriage: K163 (Standard on LN-8S and 8SE) P-107-T

Miscellaneous Options

Mechanized Travel Power Pack: K161 ..... P-107-V.a, V.b
Power Pack/Contactor Kit: K124 and K130 ..... P-107-W, W.1
Contactor Kit: K240 ..... P-107-W.2a, W.2b

Sec. K7.1 (Continued)

S-67 Starter P-28-H, J.b1
Mechanized Hand Travel Unit: K110 ..... P-107-X
Gear Box for K110 ..... P-107-Y
Portable Field Control: K200 ..... P-110-Z
K261 Wire Feed Speed — Analog Voltmeter (Above Code 7575 Only) P-110-AA
K262 Wire Feed Speed — Electronic Voltmeter (Above Code 7575 Only) P-110-AA
K224 Solid-State Remote Field Control P-114-H
Contactor Dropout Delay Kit ..... Order K202
10 to 25 Pound Spool Spindle ..... Order K162
Swivel Type Mounting Platform ..... Order K178

K112 & K113 Squirtguns & Cables

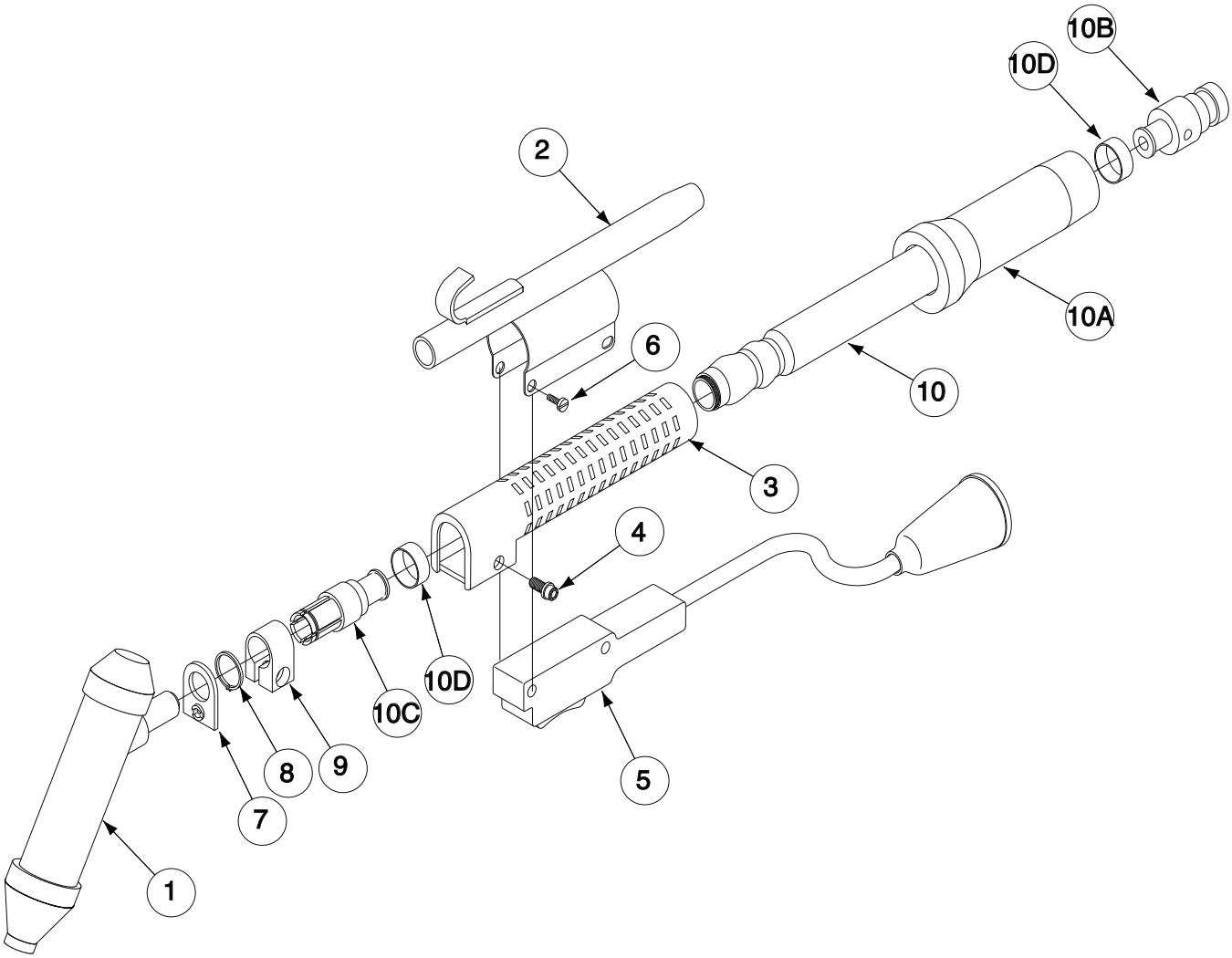

NOTE: In 1977 the semiautomatic guns were redesigned to conform to NEMA standards. To identify a new design gun an ampere rating is stencilled on the clamp of the “Clamp and Tube Assembly” (Item 2). For new design guns use columns 3 or 4. In 1979 the K112 and K113 guns were further redesigned. This latest redesign may be identified by a size molded in the nozzle insulation (Part of Item 1) near the handle to gun connection.

For Squirtgun K113, use the parts marked “X” in Column 1 or 3 (see note).
For Squirtgun K112, use the parts marked “X” in Column 2 or 4 (see note).

P-103-C.1

# Indicates a change this printing.

Use only the parts marked “x” in the column under the heading number called for in the model index page.

ITEM	DESCRIPTION	PART NO.	QTY.	1	2	3	4	5	6	7	8	9	
	Gun & Cable Assembly (5/64” Electrode)												
	(No Electrode Size Stencil)	K113	1	•	•	X	•						
	Gun & Cable Assembly (5/64” Electrode) (Stenciled 5/64)	K113-5/64	1	X	•	X	•						
	Gun & Cable Assembly (3/32” Electrode) (Stenciled 3/32)	K113-3/32	1	•	•	X	•						
1	Gun Assembly	M10614-4 Ø	1	•	X	•	X						
1	Gun Assembly	M10614-7	1	•	•	•	X						
1	Gun Assembly	M10614-9	1	X	•	X	•						
1	Gun Assembly	M10614-8	1	•	•	X	•						
	Gun Parts	See P-103-D											
2	Clamp and Flux Tube Assembly	S16165	1	X	X	X	X						
3	Handle	M10102	1	X	X	•	•						
3	Handle	M10102-1	1	•	•	X	X						
4	Socket Head Cap Screw	T9447-9	1	X	X	•	•						
4	Socket Head Cap Screw	T14438	1	•	•	X	X						
5	Trigger and Control Cable Assembly	M12462-15	1	X	X	X	X						
	Assembly Parts	See P-103-K											
6	8-32 x 1/4 Pan Head Screw	CF000148	4	X	X	X	X						#
7	Spatter Shield	T12027	1	X	X	X	X						
8	Retaining Ring	S9776-7	1	X	X	X	X						
9	Clamp	S11598-1	1	X	X	•	•						
9	Clamp	S15921-2	1	•	•	X	X						
10	Conductor Cable, Includes:	L5728-7	1	•	•	X	•						
10	Conductor Cable, Includes:	L4230-7	1	X	•	•	•						
10	Conductor Cable, Includes:	L4230-1	1	•	X	•	•						
10	Conductor Cable, Includes: (350 Amp)	L5728-1 Ø	1	•	•	•	X						
10	Conductor Cable, Includes: (500 Amp)	L6250-4	1	•	•	•	X						
10A	Handle and Stiffener, Wire Feeder End	M14048	1	X	•	X	•						
10A	Handle and Stiffener, Wire Feeder End	M14050-1	1	•	X	•	X						
10B	Connector, Wire Feeder End	S12801-6		X	•	X	•						
10B	Connector, Wire Feeder End (350 Amp)	S12801-1 Ø		•	X	•	X						
10B	Connector, Wire Feeder End (500 Amp)	S12801-9		•	•	•	X						
10C	Connector, Gun End (350 Amp)	S12802-11		•	•	•	X						
10C	Connector, Gun End (500 Amp)	S12802-16		•	•	•	X						
10C	Connector, Gun End	S12802-6		X	•	•	•						
10C	Connector, Gun End	S12802-1		•	X	•	•						
10C	Connector, Gun End	S12802-14		•	•	X	•						
10D	Clamping Tube, Both Ends (All Except 500A)	S7748-40	2	X	X	X	X						
10D	Clamping Tube, Both Ends (500A Only)	S16997	2	•	•	•	X						
11	Cable Liner - For K112 (1/16” Electrode, 350 Amp Only)	S12898-5/64 Ø	1	•	X	•	•						
	Adapter Kit to use Squirtguns K113 with MN-1 and MN-3 (Not Illustrated)	M10682 Ø	1	X	•	X	•						
	Adapter Kit to use Squirtguns K113 with ML-2 (Not Illustrated)	S12967 Ø	1	X	•	X	•						

Ø This part is obsolete and no longer available.

LINCOLN® ELECTRIC

P-103-D

Gun Assembly - Squirtguns K112 & K113

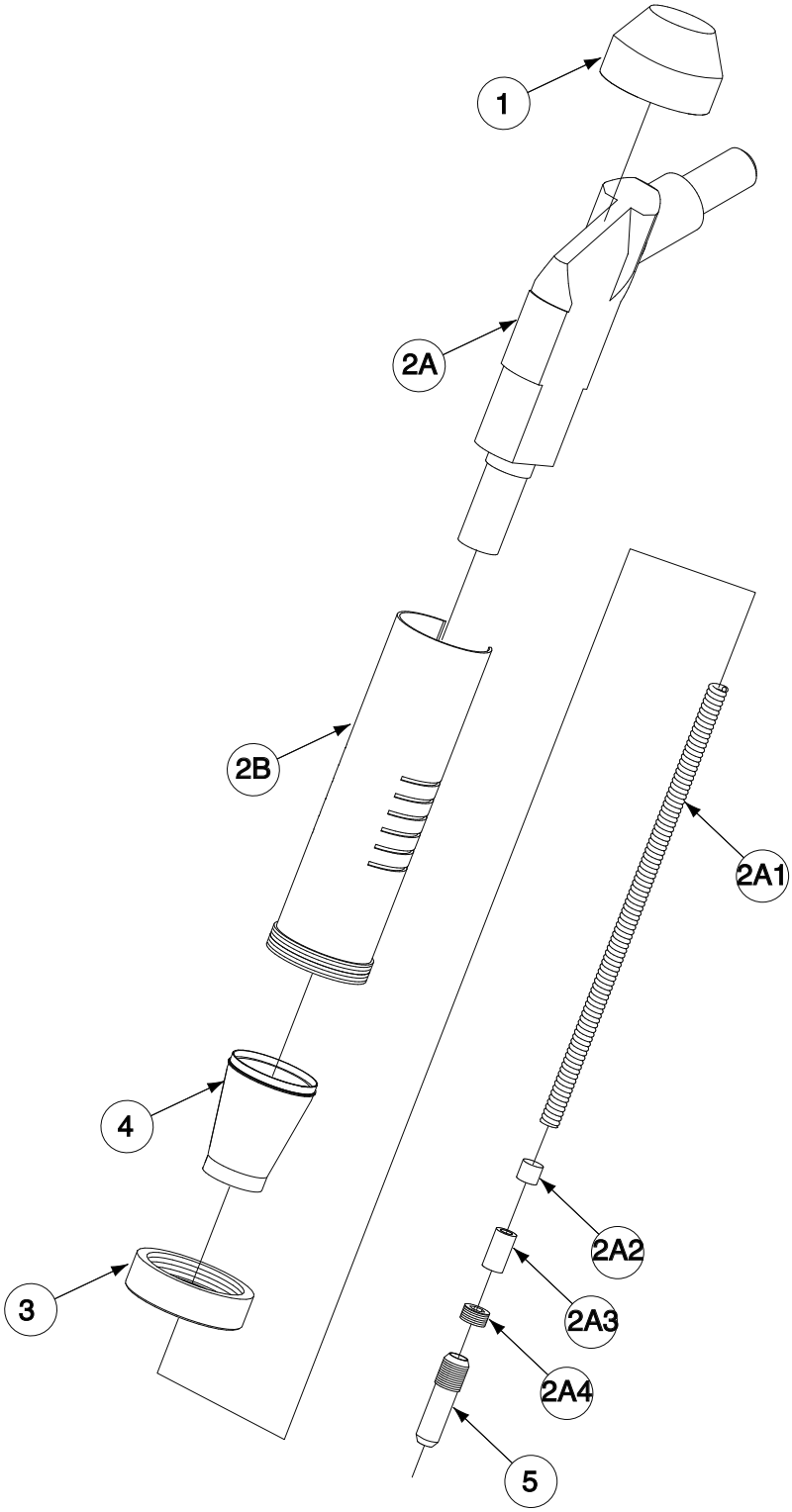

NOTE: In 1977 the semiautomatic guns were redesigned to conform to NEMA standards. To identify a new design gun an ampere rating is stencilled on the clamp of the “Clamp & Tube Assembly” (Item 2 of P-103-C). For new design guns use columns 3, 4 or 5. In 1979 the K112 and K113 guns were further redesigned. This latest redesign may be identified by a size molded in the nozzle insulation (Part of Item 2) near the handle to gun connection.

For Squirtgun K113, use the parts marked “X” in Column 1 or 3 (see note).
For Squirtgun K112, use the parts marked “X” in Column 2 or 4 (see note).
For Squirtgun K112 (500 Amp), use the parts marked “X” in Column 5 (see note).

P-103-D.1

# Indicates a change this printing.

Use only the parts marked “x” in the column under the heading number called for in the model index page.

ITEM	DESCRIPTION	PART NO.	QTY.	1	2	3	4	5	6	7	8	9	
1	Cap	S12955	1	X	X	•	•	•					
1	Cap	T14181	1	•	•	X	X	X					
2	Housing & Nozzle Asbly, Includes:(5/64, Stenciled)	M10670-7	1	X	•	X	•	•					
2	Housing & Nozzle Asbly, Includes:(3/32, Stenciled)	M10670-6	1	•	•	X	•						
2	Housing & Nozzle Asbly, Includes:	M10670-4 Ø	1	•	X	•	X	•					
2	Housing & Nozzle Asbly, Includes:	M10670-5	1	•	•	•	•	X					
2A	Nozzle	S13813-1	1	•	X	•	X	X					
2A	Nozzle (3/32)	S13813-3	1	•	•	X	•	•					
2A	Nozzle (5/64)	S13813-4	1	•	•	X	•	•					
2A1	Nozzle Liner, Tight Wound Steel Spring (For 5/64, No Stencil)	KP2095-1	1	X	•	X	•	•					#
2A1	Nozzle Liner, Tight Wound Steel Spring (For 5/64 Stenciled)	KP2095-12	1	•	•	X	•	•					#
2A1	Nozzle Liner, Tight Wound Steel Spring (For 3/32 Stenciled)	KP2095-11	1	•	•	X	•	•					#
2A1	Nozzle Liner, Tight Wound Steel Spring	T12931-3	1	•	X	•	X	X					
2A2	Ceramic Insert	KP2094-2	1	•	•	X	•	•					
2A3	Insert Retainer	T12977-1	1	•	•	X	•	•					
2A4	Hollow Lock Set Screw	T12932-1	1	X	X	X	X	X					
2B	Housing	S13486-1 Ø	1	•	X	•	X	•					
2B	Housing	S13486-2	1	X	•	X	•	X					
3	Collar	S12964-1	1	X	X	X	X	X					
4	Nozzle Flux Cone (S12957-1/2)	KP1968-1	1	X	X	X	X	X					
4	Nozzle Flux Cone (S12957-5/8)	KP1968-5	1	X	X	X	X	X					
4	Nozzle Flux Cone (S12957-3/4)	KP1968-4	1	X	X	X	X	X					
4	Nozzle Flux Cone (S12957-13/16)	KP1968-2	1	X	X	X	X	X					
4	Nozzle Flux Cone (S12957-15/16)	KP1968-3	1	X	X	X	X	X					
4	Chamfered 3/4” Nozzle Flux Cone	T14278	1	X	X	X	X	X					
5	Contact Tip, 1/16” Electrode T12011-1/16	KP2086-2	*	•	X	•	X	•					
5	Contact Tip, 5/64” Electrode T12011-5/64	KP2086-4	*	X	•	X	•	•					
5	Contact Tip, 3/32” Electrode T14050-3/32 (Note 1)	T14050-3/32	*	•	•	X	•	•					
5	Contact Tip, 3/32” Electrode T12011-3/32 (1)	KP2086-3 (1)		•	•	X	•	•					
5	Contact Tip, 1/16” Electrode T14050-1/16 (Note 1)	T14050-1/16	*	•	•	•	•	X					
	Nozzle Extension K113-5/64, 1-3/4 Stickout	S13027-4	1	X	•	X	•	•					
	Nozzle Extension K113-3/32, 1-3/4 Stickout	S13027-5	1	X	•	X	•	•					
	Nozzle Extension K113-3/32, 2-1/8 Stickout	S13027-3	1	X	•	X	•	•					
	Guide Tips for Long Stickout Extensions K113-5/64	KP2104-2	1	X	•	X	•	•					
	Guide Tips for Long Stickout Extensions K113-3/32	KP2091-1	1	X	•	X	•	•					
	Guide Tips for Long Stickout Extensions K113-3/32	T14435-3/32 (1)		X	•	X	•	•					

***** As Required
(1) To be used only when using S13027-5 extension

NOTE 1: When tip life is limited by tip being fused over the use of T14726-[ ] tips may result in a lower overall cost.

Ø This part is obsolete and no longer available.

P-103-E

K114 Squirtgun & Cable

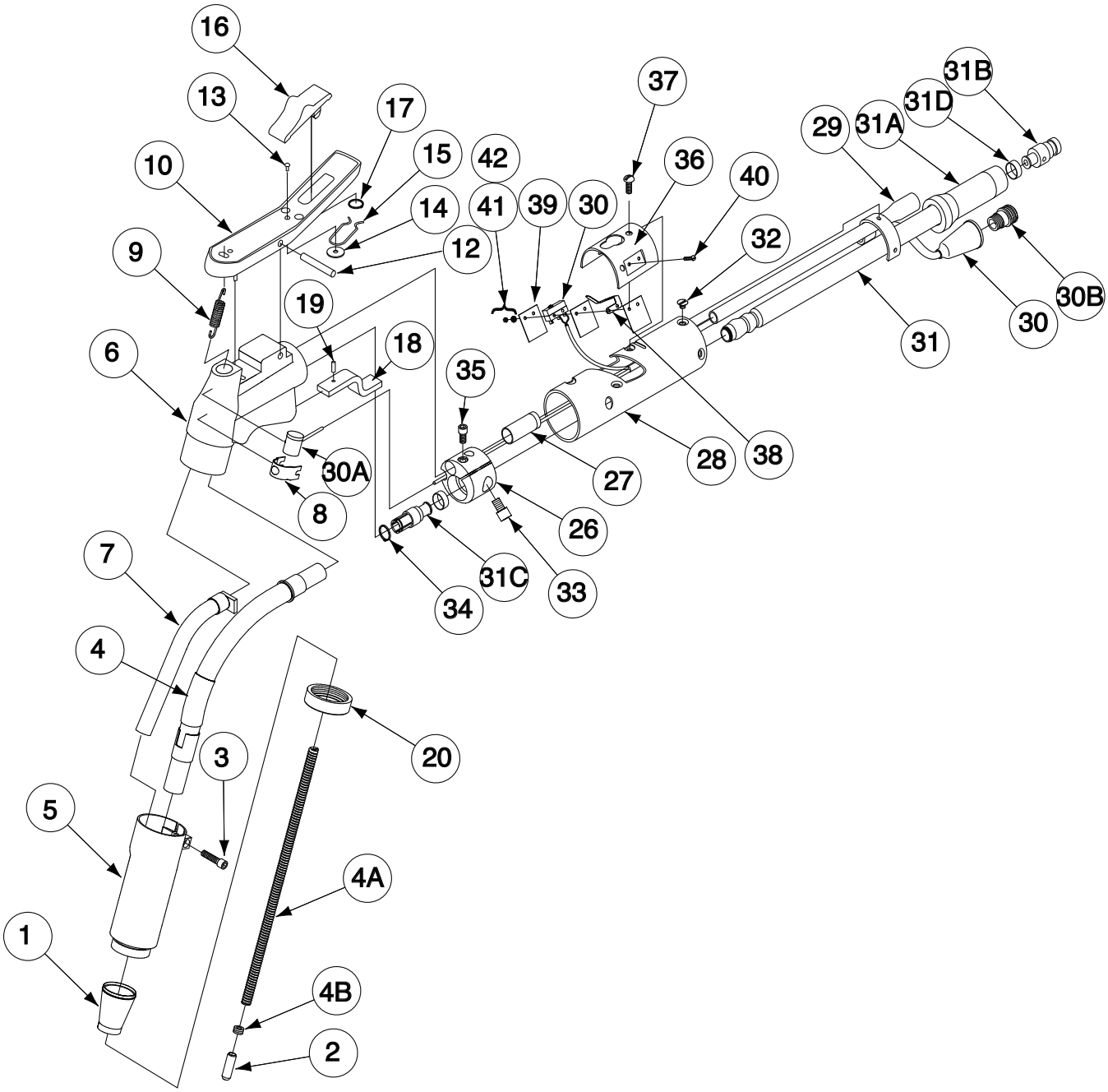

# Indicates a change this printing.

Use only the parts marked “x” in the column under the heading number called for in the model index page.

ITEM	DESCRIPTION	PART NO.	QTY.	1	2	3	4	5	6	7	8	9
	Squirtgun & Cable	K114										
1	Nozzle Flux Cone 13/16” Opening (Opt)(S12957-13/16)	KP1968-2	1	X								
1	Nozzle Flux Cone 5/8” Opening (Std) (S12957-5/8)	KP1968-5	1	X								
1	Nozzle Flux Cone 3/4” Opening (Opt) (S12957-3/4)	KP1968-4	1	X								
1	Nozzle Flux Cone 15/16” Opening (Opt)(S12957-15/16)	KP1968-3	1	X								
2	Contact Tip (T12236-3/32)	KP2088-2	As Req’d	X								
2	Contact Tip (Optional) (T12236-5/64)	KP2088-3	1	X								
	Gun Assembly, Includes: (Items 3 thru 20)	L5757-A	1	X								
3	Socket Head Cap Screw	T9447-22	1	X								
4	Nozzle, Includes:	S13816	1	X								
4A	Nozzle Liner, Tight Wound Steel Spring	T12931-2	1	X								
4B	Liner Locking Screw	T12932-2	1	X								
5	Gun Tube	S13042	1	X								
6	Right & Left Gun Mount	L3828	1	X								
7	Flux Shut Off Assembly	S11686	1	X								
8	Receptacle Clamp	T11521	1	X								
9	Spring	T11514	1	X								
10	Lever	S11567-1	1	X								
12	Pivot Pin	T11546	1	X								
13	Rivet	T10167-1	1	X								
14	Plain Washer	S9262-39	1	x								
15	Spring Clip	S11685	1	X								
16	Trigger	S11569	1	X								
17	Snap Ring	S9776-16	1	X								
18	Gun Hanger	T11523	1	X								
19	Roll Pin	T9967-23	1	X								
20	Collar	S12964-1	1	X								
	Handle & Conductor Cable Asbly, Includes: (Items 26 thru 42)	L5757-B										
26	Clamping Ring	S12903	1	X								
27	Tube Insulator	T11584	1	X								
28	Handle	S11629	1	X								
29	Flux Tube	S11822	1	X								
30	Control Cable, Includes:	M9473	1	X								
	Micro Switch	S12182-1	1	X								
30A	3 Contact Receptacle, Gun End	T11155-1	1	X								
30B	5 Contact Receptacle, Wire End	S12020-6	1	X								
31	Conductor Cable, Includes:	L5728-6	1	X								
31A	Handle & Stiffener, Wire Feeder End	M14048	1	X								
31B	Connector, Wire Feeder End	S12801-6	1	X								
31C	Connector, Gun End	S12802-14	1	X								
31D	Clamping Tube, Both Ends	S7748-40	2	X								
32	#8-32 x 1.875 FHS	CF000133	2	X								
33	Socket Head Screw	T9447-8	1	X								
34	Snap Ring	S9776-28	1	X								
35	Socket Head Screw	T9447-21	1	X								
36	Switch Mounting Plate	S11588	1	X								
37	#8-32 x .50 RHS	CF000033	3	X								
38	Actuator	T11527	1	X								
39	Insulation	T11522	3	X								
40	#2-56 x .4375 RHS	CF000135	2	X								

# Indicates a change this printing.

Use only the parts marked “x” in the column under the heading number called for in the model index page.

ITEM	DESCRIPTION	PART NO.	QTY.	1	2	3	4	5	6	7	8	9	
41	Lock Washer	T9695-10	2	X									
42	#2-56 HN	CF000136	2	X									
	Nozzle Extension, 2-1/4” Stickout, (Not Shown)	S12891-1	1	X									
	Housing	S13028-1	1	X									
	Insert	T12329-1	1	X									
	Tip	T12328-3/32	1	X									
	Nozzle Extension, 3-1/4” Stickout, (Not Shown)	S12891-2 Ø	1	X									
	Housing	S13028-2	1	X									
	Insert	T12329-2 Ø	1	X									
	Tip	T12328-3/32	1	X									
	Adapter Kit to use Squirtgun K114 w/MN-1 & ML-3 (Not Shown)	KP24A-62	1	X									#
	Adapter Kit to use Squirtgun K114 w/ML-2 (Not Shown)	S12967 Ø	1	X									

Ø This part is obsolete and no longer available.

NOTES

P-103-F

K115 Squirtgun & Cable

NOTE 1: For old contact tips (length 7/8”) used only with nozzles made before Fall 1968, order: T12236 – .120
T12236 – 7/64”
T12236 – 3/32"

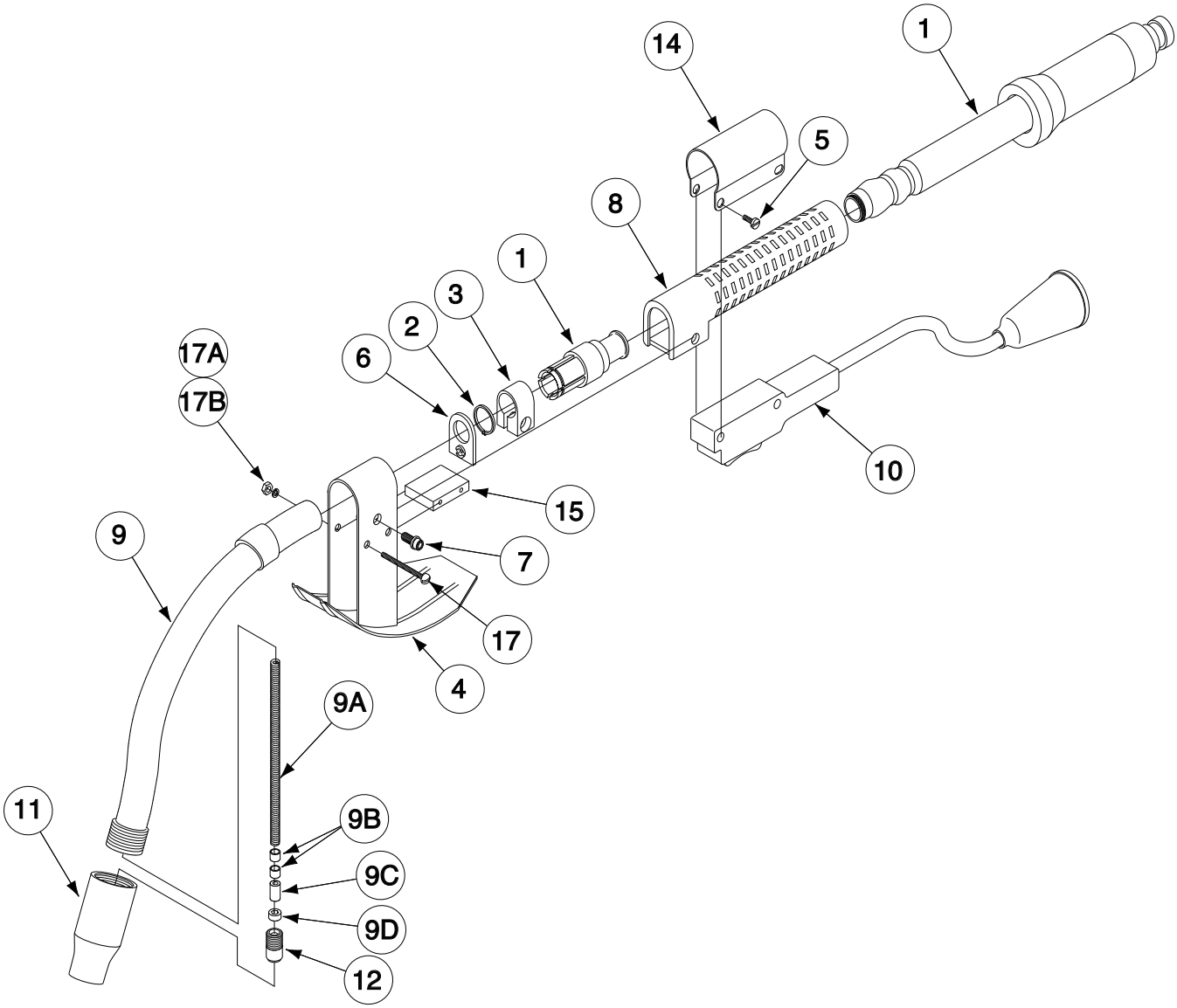

NOTE: In 1977 the semiautomatic guns were redesigned to conform to NEMA standards. To identify a new design gun an ampere rating is stencilled on the “Switch Housing Clamp” (Item 14). For new design guns use columns 5, 6, 7, 8, 9 or 10.

For .120 & 7/64” Electrode Gun, use the parts marked “X” in Column 1, 3, 5 or 7.
For 3/32” Electrode Gun, use the parts marked “X” in Column 2, 4, 6 or 8.
For 5/64” Electrode Gun, use the parts marked “X” in Column 9 or 10

P-103-F.1

# Indicates a change this printing.

ITEM	DESCRIPTION	PART NO.	QTY.	1	2	3	4	5	6	7	8	9	10	
	Gun & Cable Asbly (82º Nozzle): .120 & 7/64	K115-.120*	1	X	•	•	•	X	•	•	•	•	•	
	Gun & Cable Asbly (82º Nozzle): 3/32 Wire	K115-3/32*	1	•	X	•	•	•	X	•	•	•	•	
	Gun & Cable Asbly (82º Nozzle): 5/64 Wire	K115-5/64*	1	•	•	•	•	•	•	•	•	X	•	
	Gun & Cable Asbly (45º Nozzle): .120 & 7/64 Wire	K115-45-.120*	1	•	•	X	•	•	•	X	•	•	•	
	Gun & Cable Asbly (45º Nozzle): 3/32 Wire	K115-45-3/32*	1	•	•	•	X	•	•	•	X	•	•	
	Gun & Cable Asbly (45º Nozzle): 5/64 Wire	K115-45-5/64*	1	•	•	•	•	•	•	•	•	•	X	
1	Conductor Cable, Includes:	L4230-5* or -10*	1	X	X	X	X	•	•	•	•	•	•	
1	Conductor Cable, Includes:	L5728-5* or -10*	1	•	•	•	•	X	X	X	X	•	•	
1	Conductor Cable, Includes:	L5728-7* or -14*	1	•	•	•	•	•	•	•	•	X	X	
	Handle, Wire Feeder End	M14048	1	X	X	X	X	X	X	X	X	X	X	
	Connector, Wire Feeder End	S12801-6	1	•	•	•	•	•	•	•	•	X	X	
	Connector, Gun End	S12802-4	1	X	X	X	X	•	•	•	•	•	•	
	Connector, Gun End	S12802-13	1	X	X	X	X	X	X	X	X	X	•	
	Connector, Gun End	S12802-14	1	•	•	•	•	•	•	•	•	X	X	
	Clamping Tube, Both Ends	S7748-40	2	X	X	X	X	X	X	X	X	X	X	
2	Snap Ring	S9776-7	1	X	X	X	X	X	X	X	X	X	X	
3	Clamp	S15921-1	1	X	X	X	X	X	X	X	X	X	X	
4	Clamp & Shield Assembly	S12880	1	X	X	X	X	X	X	X	X	X	X	
5	#8-32 x .25 Pan Head Screw	CF000148	4	X	X	X	X	X	X	X	X	X	X	
6	Spatter Shield	T12027	1	X	X	X	X	X	X	X	X	X	X	
7	Socket Head Cap Screw	T9447-9	1	X	X	X	X	•	•	•	•	•	•	
7	Socket Head Cap Screw	T14438	1	•	•	•	•	X	X	X	X	X	X	
8	Handle	M10102	1	X	X	X	X	•	•	•	•	•	•	
8	Handle	M10102-1	1	•	•	•	•	X	X	X	X	X	X	
9	Nozzle (82º), Includes: (M11474-.120)	KP1907-1	1	X	•	•	•	X	•	•	•	•	•	#
9	Nozzle (82º), Includes: (M11474-3/32)	KP1907-2	1	•	X	•	•	•	X	•	•	•	•	#
9	Nozzle (82º), Includes: (M14027-82-5/64)	KP1919-2	1	•	•	•	•	•	•	•	•	X	•	#
9	Nozzle (45º), Includes: (M11510-.120)	KP1910-1	1	•	•	X	•	•	•	X	•	•	•	#
9	Nozzle (45º), Includes: (M11510-3/32)	KP1910-2	1	•	•	•	X	•	•	•	X	•	•	#
9	Nozzle (45º), Includes: (M14027-45-5/64)	KP1919-1	1	•	•	•	•	•	•	•	•	•	X	#
9A	Nozzle Liner, Tight Wound Steel Spring (.120) (T12931-7)	KP2095-6	1	X	•	X	•	X	•	X	•	•	•	
9A	Nozzle Liner, Tight Wound Steel Spring (3/32) (T12931-5)	KP2095-5	1	•	X	•	X	•	X	•	X	•	•	
9A	Nozzle Liner, Tight Wound Steel Spring (5/64) (T12931-32)	KP2095-13	1	•	•	•	•	•	•	•	•	X	X	
9B	Nozzle Insert (.120) (T12576-3)	KP2094-3	1	X	•	X	•	X	•	X	•	•	•	
9B	Nozzle Insert (3/32) (T12576-1)	KP2094-1	1	•	X	•	X	•	X	•	X	•	•	
9B	Nozzle Insert (5/64) (T12576-1)	KP2094-1	2	•	•	•	•	•	•	•	•	X	X	
9C	Nozzle Insert Retainer	T12977-2	1	X	X	X	X	X	X	X	X	•	•	
9D	Liner Locking Screw	T12932-2	1	X	X	X	X	X	X	X	X	X	X	
10	Trigger & Control Cable Assembly	M12462-10 or -15*	1	X	X	X	X	X	X	X	X	X	X	
	Assembly Parts	See P-103-K												
11	Insulated Guide, 2-3/4” Electrical Stickout	S12691-1	1	X	X	X	X	X	X	X	X	•	•	
11	Insulated Guide, 3-3/4” Electrical Stickout	S12691-2	1	X	X	X	X	X	X	X	X	•	•	
11	Insulated Guide, 1-1/4” Electrical Stickout	S13358	1	X	X	X	X	X	X	X	X	•	•	
12	Contact Tip (Length 1-1/8”) Note 1 (T14157-.120)	KP2103-3		X	•	X	•	X	•	X	•	•	•	#
12	Contact Tip (Length 1-1/8”) Note 1 (T14157-7/64)	KP2103-6		X	•	X	•	X	•	X	•	•	•	#
12	Contact Tip (Length 1-1/8”) Note 1 (T14157-3/32)	KP2103-4		•	X	•	X	•	X	•	X	•	•	#
12	Contact Tip (Length 1-1/8”) Note 1 (T14157-5/64)	KP2103-5		•	•	•	•	•	•	•	•	X	X	#
12	Contact Tip (Length 1-1/8”) Note 1 (T14157-072)	KP2103-1	1	•	•	•	•	•	•	•	•	X	X	#
14	Switch Housing Clamp	S12339	1	X	X	X	X	•	•	•	•	•	•	
14	Switch Housing Clamp	S15922-1	1	•	•	•	•	X	X	X	X	X	X	
15	Shield Mounting Block (Early Guns Only)													
	(Not Illustrated)	T12385 Ø	1	X	X	X	X	X	X	X	X	•	•	
17	#8-32 x 1.50 RHS	CF000119	2	X	X	X	X	X	X	X	X	X	X	
17A	Lock Washer	T9695-3	2	X	X	X	X	X	X	X	X	X	X	
17B	#8-32 HN	CF000042	2	X	X	X	X	X	X	X	X	X	X	
18	CCC Decal (Not Shown)	T13086-192	1	X	X	X	X	X	X	X	X	X	X	
	Adapter Kit to use K115 Squirtgun with MN-1 & ML-3 (Not Shown)	M10682 Ø	1	X	X	X	X	X	X	X	X	X	X	
	Adapter Kit to use K115 Squirtgun with ML-2 (Not Shown)	S12967 Ø	1	X	X	X	X	X	X	X	X	X	X	

LINCOLN ELECTRIC

Ø This part is obsolete and no longer available

P-103-G

K116 Squirtgun & Cable

NOTE 1: For old contact tips (length 7/8”) used only with nozzles made before Fall 1968, order: T12236-.120
T12236-7/64”
T12236-3/32”

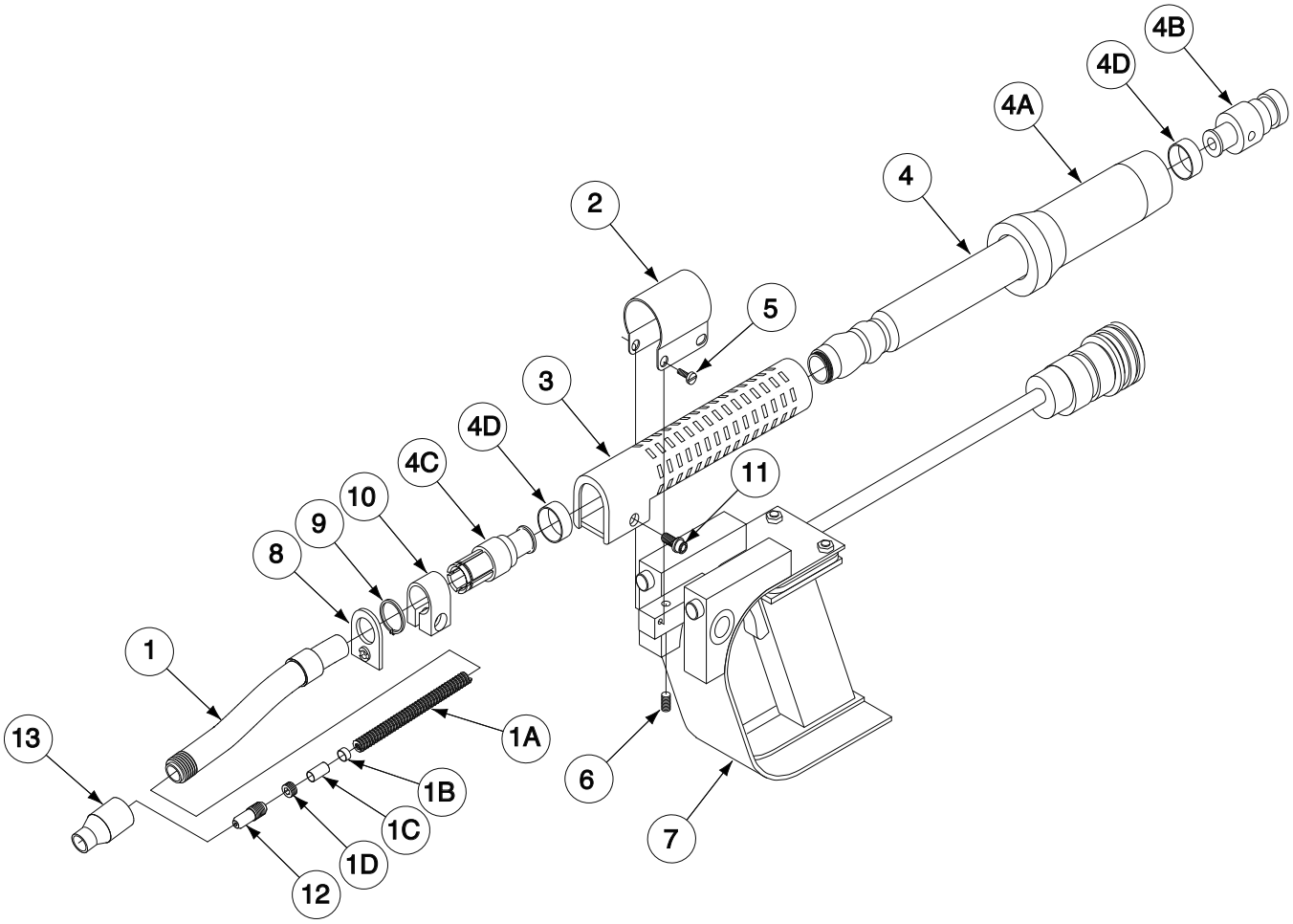

Note: In 1977 the semiautomatic guns were redesigned to conform to NEMA standards. To identify a new design gun an ampere rating is stencilled in the handle of “ Assembly” (Item 7). For new design guns use columns 3 or 4.

For .120 & 7/64" Electrode Gun, use the parts marked "X" in Column 1 or 3 (See Note).
For 3/32" Electrode Gun, use the parts marked "X" in Column 2 or 4 (See Note)

P-103-G.1

# Indicates a change this printing.

Use only the parts marked "x" in the column under the heading number called for in the model index page.

ITEM	DESCRIPTION	PART NO.	QTY.	1	2	3	4	5	6	7	8	9	
	Gun & Cable Assembly-.120" & 7/64" Electrode	K116-.120*	1	X	•	X	•						
	Gun & Cable Assembly - 3/32" Electrode	K116-3/32*	1	•	X	•	X						
1	Nozzle, Includes:	M11475-.120	1	X	•	X	•						
1	Nozzle, Includes:	M11475 - 3/32	1	•	X	•	X						
1A	Nozzle Liner, Tight Wound Steel Spring (T12931-8)	KP2095-7	1	X	•	X	•						
1A	Nozzle Liner, Tight Wound Steel Spring	T12931-6 Ø	1	•	X	•	X						
1B	Nozzle Insert (T12576-3)	KP2094-3	1	X	•	X	•						
1B	Nozzle Insert (T12576-1)	KP2094-1	1	•	X	•	X						
1C	Nozzle Insert Retainer	T12977-2	1	X	X	X	X						
1D	Liner Locking Screw	T12932-2	1	X	X	X	X						
2	Switch Housing Clamp	S12339-1	1	X	X	X	X						
3	Handle	M10102	1	X	X	•	•						
3	Handle	M10102-1	1	•	•	X	X						
4	15' Conductor Cable, Includes:	L5728-5*	1	X	X	X	X						
4	15' Conductor Cable, Includes:	L5728-10*	1	X	X	X	X						
4	10' Conductor Cable, Includes:	L4230-10*	1	X	X	•	•						
4	10' Conductor Cable, Includes:	L5728-10*	1	•	•	X	X						
4A	Handle, Wire Feeder End	M14048	1	X	X	X	X						
4B	Connector, Wire Feeder End	S12801-4	1	X	X	X	X						
4C	Connector, Gun End	S12802-4	1	X	X	•	•						
4C	Connector, Gun End	S12802-13	1	•	•	X	X						
4D	Clamping Tube, Both Ends	S7748-40	2	X	X	X	X						
5	8-32 x 1/4 Pan Head Screw	CF000049	4	X	X	X	X						
6	Socket Head Screw	S11604-9	2	X	X	X	X						
7	Handle & Control Cable Assembly - 15' Length	L5734-15* Ø	1	X	X	X	X						
7	Handle & Control Cable Assembly - 10' Length	L4189-10*	1	X	X	•	•						
7	Handle & Control Cable Assembly - 10' Length	L5734-10*	1	•	•	X	X						
	Assembly Parts	See P-103-H	1	•	•	X	X						
8	Spatter Shield	T12027	1	X	X	X	X						
9	Snap Ring	S9776-7	1	X	X	X	X						
10	Clamp	S11598-1	1	X	X	•	•						
10	Clamp	S15921-2	1	•	•	X	X						
11	Socket Head Cap Screw	T9447-9	1	X	X	•	•						
11	Socket Head Cap Screw	T14438	1	•	•	X	X						
12	Contact Tip (Length 1-1/8") Note 1 (T14157-.120)	KP2103-3	As Req'd	X	•	X	•						#
12	Contact Tip (Length 1-1/8") Note 1 (T14157-7/64)	KP2103-6	As Req'd	X	•	X	•						#
12	Contact Tip (Length 1-1/8") Note 1 (T14157-3/32)	KP2103-4	As Req'd	•	X	•	X						#
13	Insulated Guide, 2-3/4" Electrical Stickout (S12691-1)	KP1965-1	1	X	X	X	X						#
13	Insulated Guide, 3-3/4" Electrical Stickout (S12691-2)	KP1965-2	1	X	•	•	•						#
13	Insulated Guide, 1-1/2" Electrical Stickout (S13358)	KP1971-1	1	•	X	X	X						#
	Adapter Kit to Use K116 w/MN-1 & ML-3 (Not Shown)	M10682 Ø	1	X	X	X	X						
	Adapter Kit to Use K116 with ML-2 (Not Shown)	S12967 Ø	1	X	X	X	X						

* Specify 15' or 10' Cable as Appropriate

Ø This part is obsolete and no longer available.

LINCOLN® ELECTRIC

K116 Squirtgun Handle & Control Cable

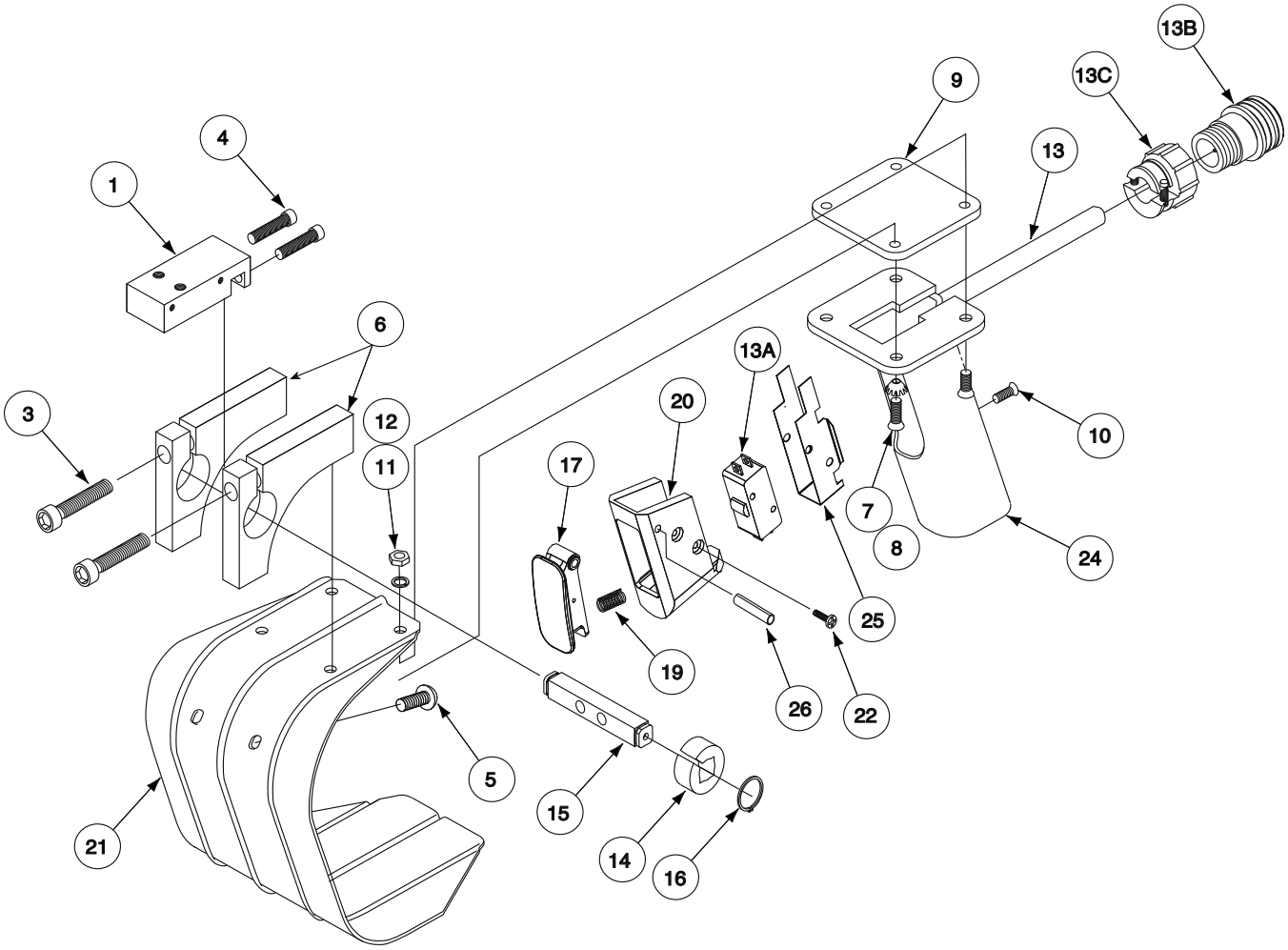

# Indicates a change this printing.

ITEM	DESCRIPTION	PART NO.	QTY.	1	2	3	4	5	6	7	8	9	
	Squirtgun Handle & Control Cable	K116											
	Handle & Control Cable Assembly - 15' Length	L5734-15	1	X									
	Handle & Control Cable Assembly - 10' Length	L5734-10	1	X									
	Handle & Control Cable Assembly - 15' Length	L4189-15	1	X									
	Handle & Control Cable Assembly - 10' Length	L4189-10	1	X									
1	Handle Mounting Bracket	S12905	1	X									
3	Socket Head Cap Screw	T9447-36	2	X									
4	Socket Head Cap Screw	T9447-22	2	X									
5	#8-32 x .5 RHS	CF000033	12	X									
6	Handle Pivot Block	S12690	2	X									#
7	#8-32 x .625 FHS	CF000147	2	X									
8	Lock Washer	T10441-1	2	X									
9	Insulating Pad	T12241	1	X									
10	#8-32 x .5 FHS	CF000146	3	X									
11	Lock Washer	T4291-A	2	X									
12	#8-32 HN	CF000042	2	X									
13	Control Cable, Includes: 15' Length	M10427-15	1	X									
13	Control Cable, Includes: 10' Length	M10427-10	1	X									
13A	Micro Switch	T12485	1	X									
13B	Polarized Plug, Wire Feeder End	S12020-6	1	X									
13C	Clamp at Plug	S12024-1	1	X									
14	Friction Bushing	T12233	2	X									
15	Handle Pivot Shaft	T12239	1	X									
16	Snap Ring	S9776-25	2	X									
17	Trigger Assembly	S23982 [*]	1	X									
19	Spring	T12025	1	X									
20	Trigger Mounting Block (Straight Pull Trigger)	S12688	1	X									
20	Trigger Mounting Block (Pivoting Trigger)	M18910	1	X									
21	Gun Shield	L4188	1	X									
22	#3-48 x .75 RHS	CF000312	2	X									
24	Handle	S12687-1	1	X									
25	Switch Insulation	S14878	1	X									
26	Roll Pin	T9967-52	1	X									

[*] For earlier design "straight pull" (non-pivoting) trigger, contact Customer Service for replacement parts

K126 Squirtgun & Cable

Note 1: For old contact tips (length 7/8”) used only with nozzles made before Fall 1968, order:
T12011-5/64”
T12011-3/32”
T12011-.068

Note 2: When tip life is limited by tip being fused over the use of T14726-[ ] Ø tips may result in a lower overall cost.

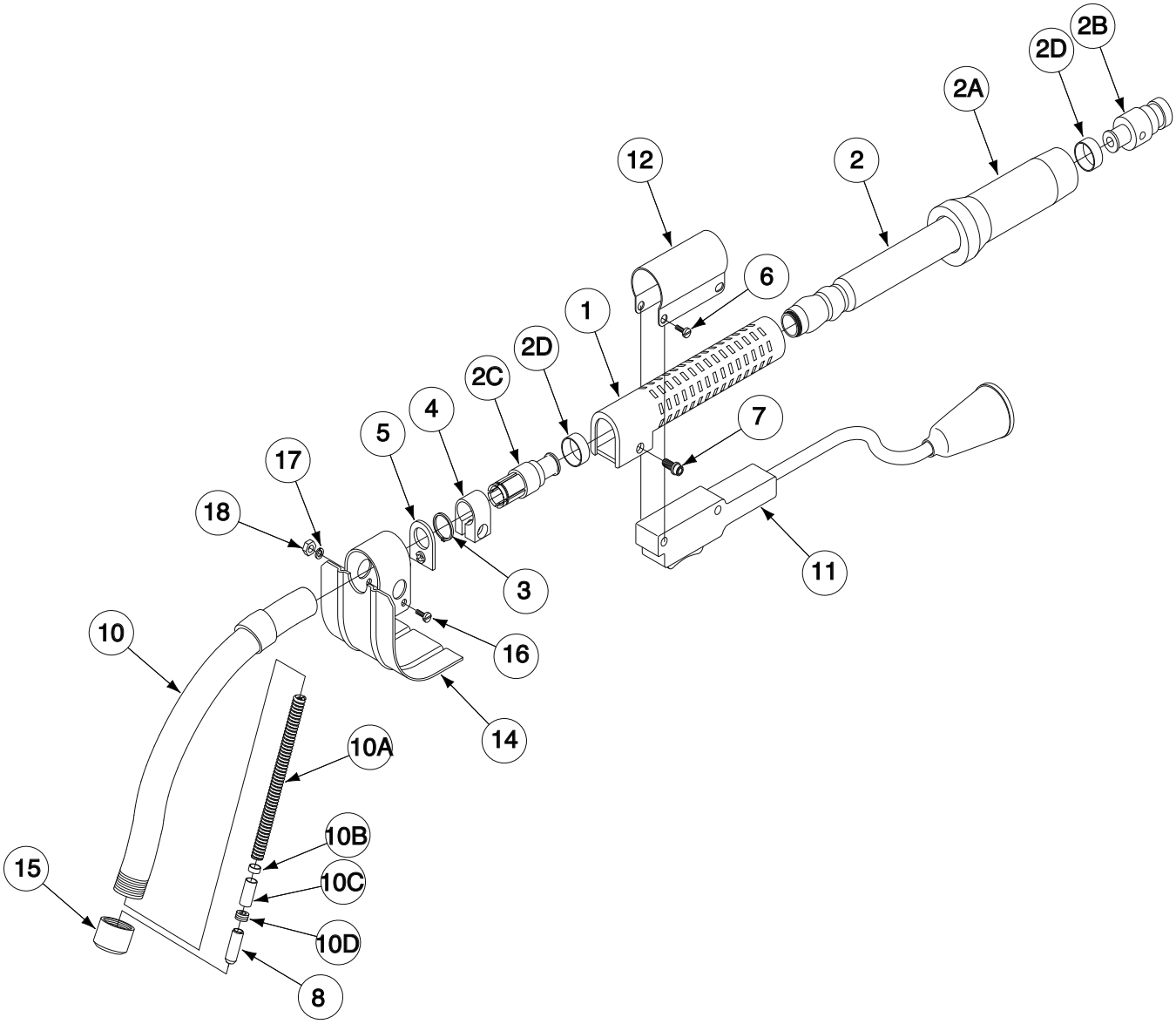

Note: In 1977 the semiautomatic guns were redesigned to conform to Nema standards. To identify a new design gun an ampere rating is stencilled on the “Clamp” (Item 12). For new design guns use column 2.

Ø This part is obsolete and no longer available.

# Indicates a change this printing.

Use only the parts marked “x” in the column under the heading number called for in the model index page.

ITEM	DESCRIPTION	PART NO.	QTY.	1	2	3	4	5	6	7	8	9	
	Gun & Cable Assembly, Includes:	K126*	1	X	X								
1	Handle	M10102-1	1	•	X								
1	Handle	M10102	1	X	•								
2	Conductor Cable, Includes: (15’)	L6250-1*	1	•	X								
2	Conductor Cable, Includes: (15’)	L4230-4*	1	X	•								
2	Conductor Cable, Includes: (10’)	L6250-2*	1	•	X								
2	Conductor Cable, Includes: (10’)	L4230-11*	1	X	•								
2A	Handle & Stiffener, Wire Feeder End	S13099	1	X	X								
2A	Handle & Stiffener, Wire Feeder End	M14050-1	1	•	X								
2B	Connector, Wire Feeder End	S12801-3	1	X	X								
2C	Connector, Gun End	S12802-12	1	•	X								
2C	Connector, Gun End	S12802-3	1	X	•								
2D	Clamping Tube, Both Ends	S16997	2	•	X								
2D	Clamping Tube, Both Ends	S7748-40	2	X	•								
3	Snap Ring	S9776-7	1	X	X								
4	Clamp	S15921-2	1	•	X								
4	Clamp	S11598-1	1	X	•								
5	Spatter Shield	T12027	1	X	X								
6	8-32 x 1/4 PHS	CF000148	4	X	X								
7	Socket Head Cap Screw	T14438	1	•	X								
7	Socket Head Cap Screw	T9447-9	1	X	•								
8	Contact Tip, 5/64” Electrode (Length 1-1/8”) Note 1 & 2	KP2100-4	As Req’d	X	X								
8	Contact Tip, 3/32” Electrode (Length 1-1/8”) Note 1 & 2	KP2100-3	As Req’d	X	X								
8	Contact Tip, .068” & .072” Electrode (Length 1-1/8”) Note 1 & 2	KP2100-1	As Req’d	X	X								
8	Contact Tip, .062” Electrode (Length 1-1/8”) Note 2	KP2100-2	As Req’d	X	X								
10	Nozzle, Includes: (M11476)	KP1909-1	1	X	X								
10A	Nozzle Liner, Tight Wound Steel Spring (T12931-4)	KP2095-4	1	X	X								#
10B	Nozzle Insert (T12576-2)	KP2094-2	1	X	X								#
10C	Nozzle Insert Retainer	T12977-1	1	X	X								#
10D	Liner Locking Screw	T12932-1	1	X	X								#
11	Trigger & Control Cable Assembly	M12462*	1	X	X								
	Assembly Parts	See P-103-K	1	X	X								
12	Clamp	S15922-1	1	•	X								
12	Clamp	S12339	1	X	•								
13	Insulated Guide, 2-3/4” Electrical Stickout (Optional)t (Not Shown)	T12315	1	X	X								
13	Insulated Guide, 2.00” Electrical Stickout (Optional) (Not Shown)	S17217-1	1	X	X								
14	Heat Shield Assembly	S13037	1	X	X								
15	Thread Protector, 3/4 to 1-1/2” Stickout (T12313)	KP2089-1	1	X	X								
16	#8-32 x 1-1/2 Round Head Screw	CF000119	4	X	X								
17	Lock Washer	T9695-3	2	X	X								
18	#8-32 Hex Nut	CF000042	2	X	X								
	Adapter Kit to use K126 with MN-1 or ML-3	M10682 ø	1	X	X								
	Adapter Kit to use K126 with ML-2	S12967 ø	1	X	X								
	* Specify Length 15’ or 10’ as appropriate.												

This part is obsolete and no longer available.

P-103-K

Trigger & Control Cable Assembly

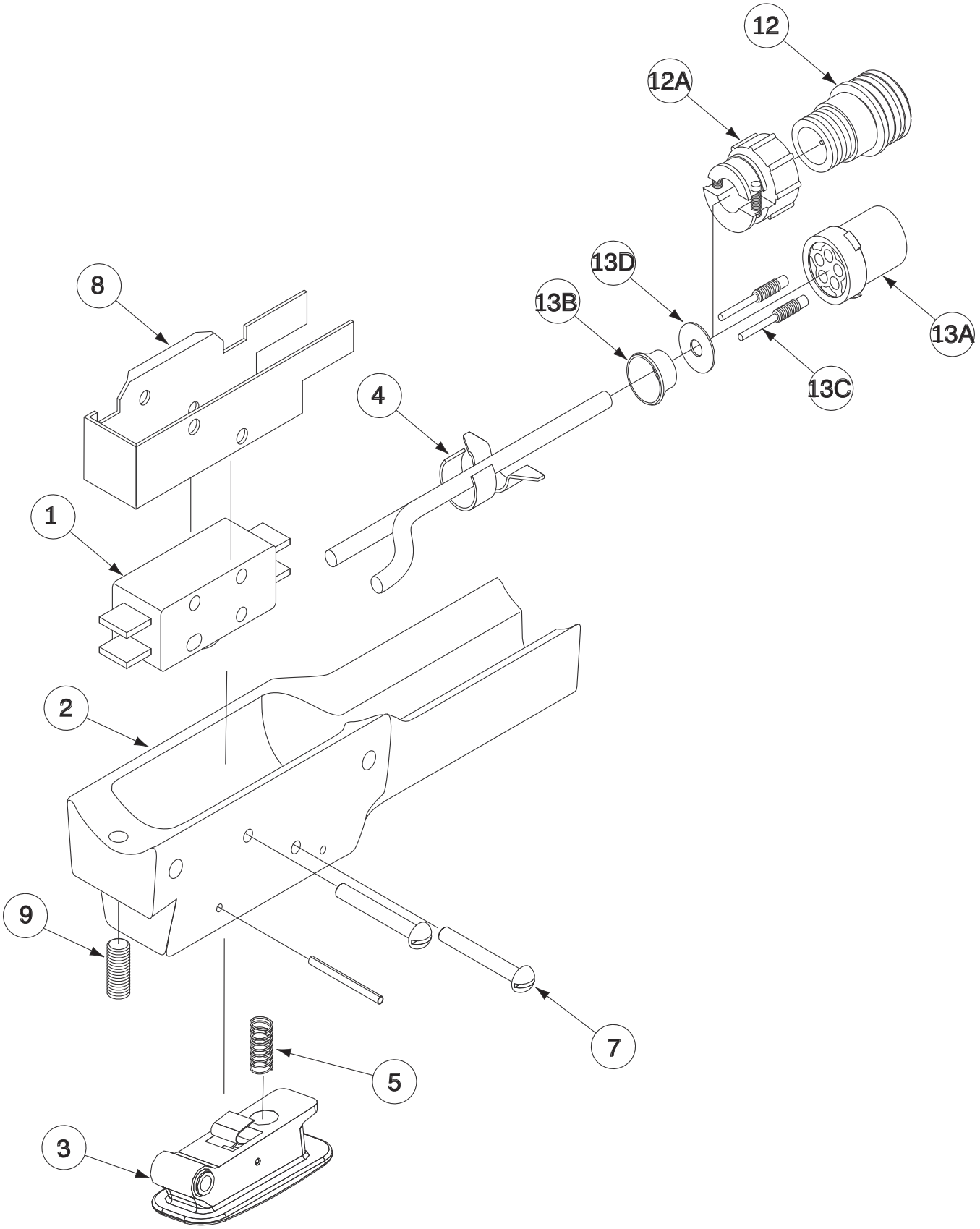

# Indicates a change this printing.

Use the parts marked “X” in column 1 for K112, K113, K115, K126, K183, K289 & K206 guns. Use the parts marked “X” in column 2 for K264, K345, K355, & K361 guns.

ITEM	DESCRIPTION	PART NO.	QTY.	1	2	3	4	5	6	7	8	9
	Trigger & Control Cable Assembly, Includes:	M12462-15’	1	X	•							
	Trigger & Control Cable Assembly, Includes:	M12462-10’	1	X	X							
	Trigger & Control Cable Assembly, Includes:	M12462-8’	1	•	X							
1	Micro Switch	T12485	1	X	X							
2	Housing	L10706	1	X	X							
3	Trigger Assembly	S23982 [*]	1	X	X							
4	Cord Clamp	T11669-2	1	X	X							
5	Spring	T12025	1	X	X							
6	Roll Pin	T9967-52	1	X	X							
7	#3-48 x .75 RHS	CF000312	2	X	X							
8	Switch Insulation	S14878	1	X	X							
9	Set Screw	S11604-22	1	X	X							
12	Polarized Plug, Wire Feeder End, (Not Shown) (Old Style)	S12020-6	1	X	•							
12	Polarized Plug, Wire Feeder End	S12020-16	1	•	X							
12A	Clamp at Polarized Plug (Old Style) (Not Shown)	S12024-1	1	X	•							
12A	Clamp at Polarized Plug	S12024-4	1	•	X							
	Molded Plug Kit, Includes:	S19757	1	X	X							
13A	Connector Body	**NSS**	1	X	X							
13B	Connector Cover	**NSS**	1	X	X							
13C	Connector Pin	**NSS**	2	X	X							
13D	Insulating Washer	**NSS**	1	X	X							
13E	Strain Relief (Not Shown)	**NSS**	1	X	X							

[*] For earlier design “straight pull” (non-pivoting) trigger, contact Service Department for replacement parts.

TRIGGER & CONTROL CABLE ASSEMBLY

07-25-2006

NSS - Not Sold Separately

Magnum 300 & 400 GMAW Gun

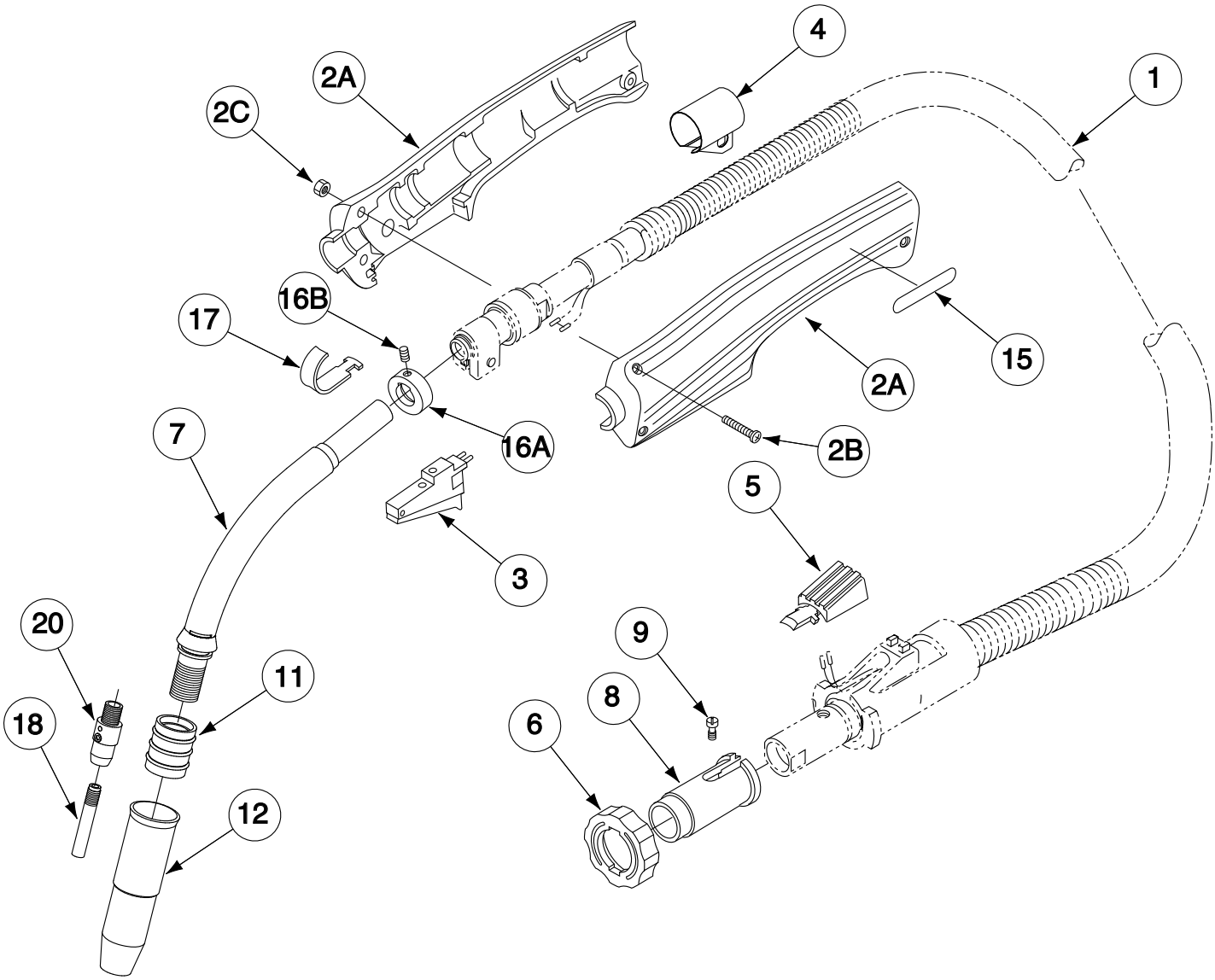

# Indicates a change this printing.

Use only the parts marked “x” in the column under the heading number called for in the model index page.

ITEM	DESCRIPTION	PART NO.	QTY.	1	2	3	4	5	6	7	8	9
	Gun & Cable Assembly:											
	300 Amp-Specify cable length & wire size.	K470-[ ]	1	X	•							
	300 Amp-Specify cable length & wire size.	K2951-[ ]	1	•	X							
	400 Amp-Specify cable length & wire size.	K471-[ ]	1	X	•							
	**400 Amp-Specify cable length & wire size.	K541-[ ]	1	X	•							
	400 Amp-Specify cable length & wire size.	K2952-[ ]	1	•	X							
1	Connector Assembly	See P-202-C.2	1	X	X							
2A	Gun Handle (Left & Right)	G1927	1	X	X							
2B	Pan Head Screw (for Handle)	S18825-1	3	X	X							
2C	Handle Nut (Knurled)	S18773	3	X	X							
3	Trigger Assembly (Non Interlocking-Standard)	S21002	1	X	X							
3	Trigger Assembly (Interlocking-Parts Order Only)	S20677 *	1	X	X							
4	Spring Boot Retainer (Gun End Only)	S24719	1	X	X							
5	Connector Cover	L7723	1	X	X							
6	Nut (Cable Handle)	S18690	1	X	X							
7	Gun Tube Assembly	See Chart P-202-C.4	1	X	•							
7	Gun Tube Assembly	See Chart P-202-C.6	1	•	X							
8	Tail Piece	M15607	1	X	X							
9	Gas Plug Assembly	S18695	1	X	X							
11	Slip on Nozzle Insulator	See Chart P-202-C.4	1	X	•							
11	Slip on Nozzle Insulator	See Chart P-202-C.6	1	•	X							
12	Gas Nozzle	See Chart P-202-C.4	1	X	•							
12	Gas Nozzle	See Chart P-202-C.6	1	•	X							
15	Decal 300 Amp	S18750-1	1	X	X							
15	Decal 400 Amp	S18750-2	1	X	X							
16	Collar Assembly, Includes:	S18831	1	X	X							
16A	Collar	S18830	1	X	X							
16B	Set Screw	S11604-46	1	X	X							
17	Hanger	M15693	1	X	X							
18	Contact Tip	See Chart P-202-C.4	1	X	•							
18	Contact Tip	See Chart P-202-C.6	1	•	X							
20	Gas Diffuser	See Chart P-202-C.4	1	X	•							
20	Gas Diffuser	See Chart P-202-C.6	1	•	X							
	Items Not Shown:											
	Cable Liners	See Chart P-202-C.4	1	X	•							
	Cable Liners	See Chart P-202-C.6	1	•	X							
	Options:											
	Magnum Connector Kits	See Chart P-202-C.4	1	X	X							
	Magnum Fast-Connect Gas Tube Kit (for K466-1)	Order K481	1	X	X							

*Trigger requires latest version of Gun Handles.

** Comes with 300 Amp Gun Tube

Connector Assembly

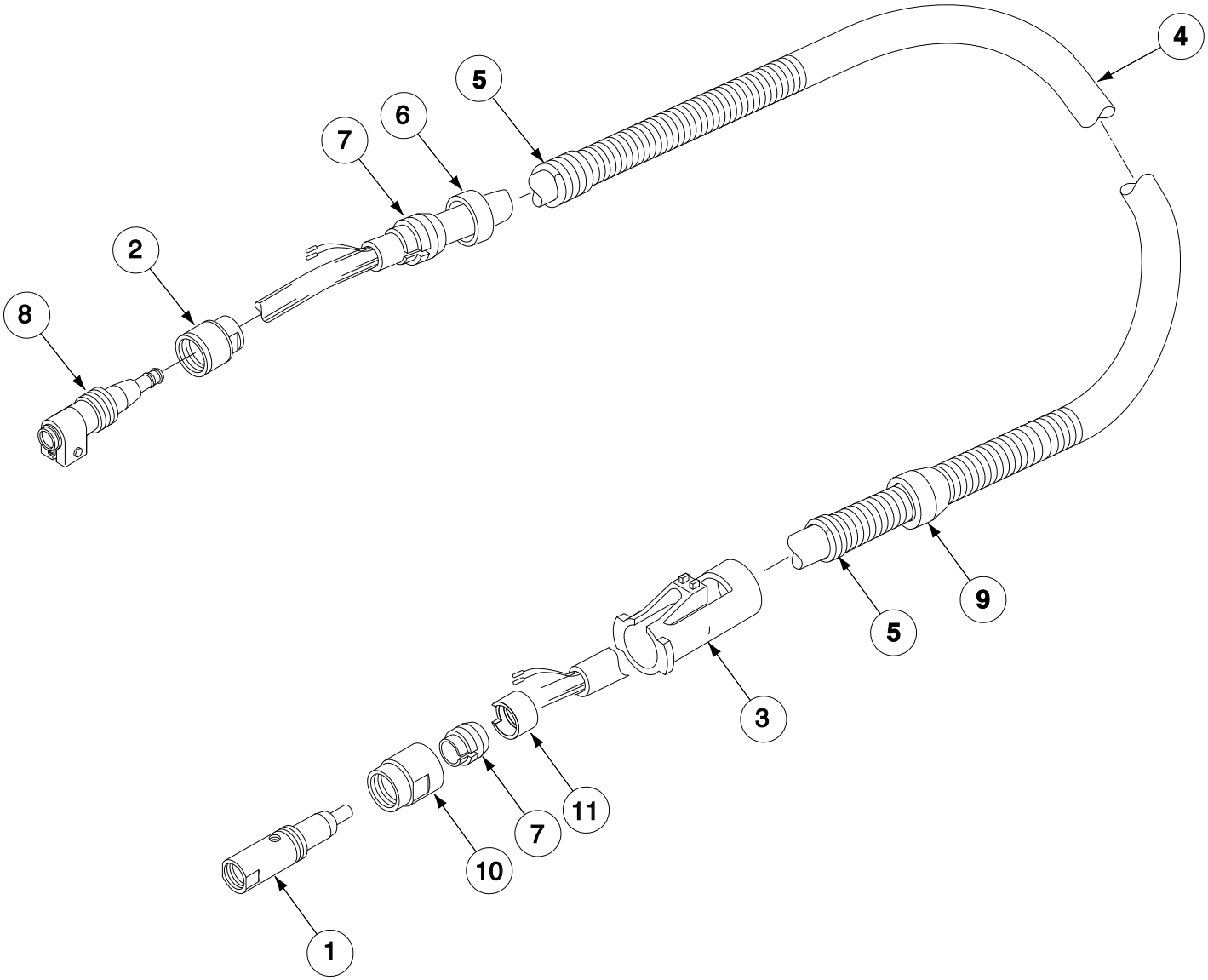

# Indicates a change this printing.

Use only the parts marked “x” in the column under the heading number called for in the model index page.

ITEM	DESCRIPTION	PART NO.	QTY.	1	2	3	4	5	6	7	8	9
	Connector Assembly (300A/10’ Cable)	L7773-1	1	X								
	Connector Assembly (300A/15’ Cable)	L7773-2	1	X								
	Connector Assembly (400A/10’ Cable)	L7773-3	1	X								
	Connector Assembly (400A/15’ Cable)	L7773-4	1	X								
	Connector Assembly (300A/12’ Cable)	L7773-5	1	X								
	Connector Assembly (400A/12’ Cable)	L7773-6	1	X								
	Connector Assembly (400A/20’ Cable)	L7773-7	1	X								
	Connector Assembly (400A/25’ Cable)	L7773-8	1	X								
	Includes:											
1	Incoming Connector Assembly	S18789	1	X								
2	Connector Nut (300 Amp)	S18749-1	2	X								
2	Connector Nut (400 Amp)	S18749-2	2	X								
3	Cable Handle	L7725	1	X								
4	Cable Assembly: (Includes 4A)											
	300 Amp, 10 Ft. Cable	L7761-3	1	X								
	300 Amp, 12 Ft. Cable	L7761-17	1	X								
	300 Amp, 15 Ft. Cable	L7761-4	1	X								
	400 Amp, 10 Ft. Cable	L7761-5	1	X								
	400 Amp, 12 Ft. Cable	L7761-18	1	X								
	400 Amp, 15 Ft. Cable	L7761-6	1	X								
	400 Amp, 20 Ft. Cable	L7761-19	1	X								
	400 Amp, 25 Ft. Cable	L7761-20	1	X								
4A	Terminal (For Mating Gun Connector End)	S19492-1	2	X								
5	Spring Boot	S24676	2	X								
6	Strain Relief Housing	S18786	1	X								
7	Strain Relief	S18787	2	X								
8	Gun Tube Connector Assembly, Includes:	S18655	1	X								
	Gun Tube Connector	M15635	1	X								
	Tube	S18847	1	X								
	“O” Ring	T13483-8	1	X								
	Nozzle Clamp	S15921-2	1	X								
	Clamping Screw	T14438	1	X								
	Retaining Ring	S9776-7	1	X								
9	Spring Boot Retainer	S24678	1	X								
10	Incoming End Nut (300 Amp)	S23822-300	1	X								
10	Incoming End Nut (400 Amp)	S23822-400	1	X								
11	Strain Relief Housing	S24677	1	X								

CHART A

Contact Tips/ Gas Diffuser	Part Number (Industry Ref.)	English Wire Size	Metric Wire Size
Standard Duty	KP14-25 or KP14-25-B100	.025”	0.6 mm
	KP14-30 or KP14-30-B100	.030”	0.8 mm
	KP14-35 or KP14-35-B100	.035”	0.9 mm
	KP14-40 or KP14-40-B100	.040”	1.0 mm
	KP14-45 or KP14-45-B100	.045”	1.2 mm
	KP14-52 or KP14-52-B100	.052”	1.3 mm
	KP14-116 or KP14-116-B100	1/16”	1.6 mm
	KP14-564 or KP14-564-B100	5/64”	2.0 mm
	KP14A-364 or KP14A-364-B100	3/64A	1.2mm
Heavy Duty	KP14H-35 or KP14H-35-B100	.035”	0.9 mm
	KP14H-40 or KP14H-40-B100	.040”	1.0 mm
	KP14H-45 or KP14H-45-B100	.045”	1.2 mm
	KP14H-52 or KP14H-52-B100	.052”	1.3 mm
	KP14H-116 or KP14H-116-B100	1/16”	1.6 mm
	KP14H-564 or KP14H-564-B100	5/64”	2.0 mm
	KP14AH-364 or KP14AH-364-B100	3/64”A	1.2 mm
	KP14AH-116 or KP14AH-116-B100	1/16”A	1.6 mm
Tapered	KP14T-25 or KP14T-25-B100	.025”	0.6 mm
	KP14T-30 or KP14T-30-B100	.030”	0.8 mm
	KP14T-35 or KP14T-35-B100	.035”	0.9 mm
	KP14T-40 or KP14T-40-B100	.040”	1.0 mm
	KP14T-45 or KP14T-45-B100	.045”	1.2 mm
	KP14T-52 or KP14T-52-B100	.052”	1.3 mm
	KP14T-116 or KP14T-116-B100	1/16”	1.6 mm
Notched Aluminum	KP2010-4B1	.035”	0.9mm
	-5B1	3/64”	1.2mm
Gas Diffuser Asbly.	KP54A or KP54A-B25	.025-5/64”	0.6-2.0 mm
Gas Diffuser Asbly.	KP2024-2 or -2B1	.025-.035”	0.6-0.9 mm

CHART B

Gas Nozzles/ Insulator	Part Number (Industry Ref.)	English I.D. Size	Metric I.D. Size
Adjustable Slip-On (Requires Nozzle Insulator Assembly)	KP24A-62	.62”	15.9 mm
	KP24A-50	.50”	12.7 mm
Recessed Slip-On (Requires Nozzle Insulator Assembly)	KP24A-62-SS	.62”	15.9 mm
	KP24A-50-SS	.50”	12.7 mm
	KP24A-37-SS	.37”	9.5 mm
Nozzle Insulator Assembly	KP34A or KP34A-B25	—	—
Fixed Nozzle Tip Recessed .12 in. (3 mm) for Spray Transfer	KP23-37	.38”	9.5 mm
	KP23-50	.50”	12.7 mm
	KP23-62	.62”	15.9 mm
	KP23-75	.75”	19.1 mm
	KP23T-37	.37”	9.5mm
Fixed Nozzle (Heavy Duty) Tip Recessed .12 in. (3mm) Spray Transfer	KP23H-62	.62”	15.9mm
	KP1954-2	.75”	19.1mm
Fixed Nozzle Tip Flush for Short-Circuiting Transfer	KP23-37F	.38”	9.5 mm
	KP23-50F	.50”	12.7 mm
	KP23-62F	.62”	15.9 mm
	KP23-75F	.75”	19.1 mm
Coarse Thread Nozzle[1] 1/8” (3.2mm) Recess	KP24CT-62-S	.62”	16mm
1/8” (3.2mm) Recess	KP24CT-75-S	.75”	19mm
1/4” (6.4mm) Recess	KP24CT-62-R	.62”	16mm
1/4” (6.4mm) Recess	KP24CT-75-R	.75”	19mm
Coarse Thread Insulator Assembly	KP34CT	—	—
Gun Tube Insulator	KP2169-1	—	—

[1] Requires Coarse Thread Insulator Assembly.

CHART C

Cable Liner For Steel	Part Number (Industry Ref.)	English Wire Size	Metric Wire Size
For 15 ft (4.5 m) and less Trim to Fit	KP44-3545-15	.035 - .045”	0.9-1.2 mm
	KP44-116-15	.052 - 1/16”	1.3-1.6 mm
	KP44-564-15	1/16 - 5/64”	1.6-2.0 mm
	KP42-25-15	.025-.030”	0.6-0.8 mm
For cables 25 ft (7.6 m) and less Trim to Fit	KP44-3545-25	.035 - .045”	0.9-1.2 mm
	KP44-116-25	.052 - 1/16”	1.3-1.6 mm
	KP44-564-25	1/16 - 5/64”	1.6-2.0 mm

Cable Liner for Aluminum	Part Number (Industry Ref.)	English Wire Size	Metric Wire Size
For 10 ft (3 m) Trim to Fit	KP1958-1	.030 - .035”	0.8-0.9 mm
	KP1958-5	.035 - 3/64”	0.9 - 1.2mm
	KP1958-3	1/16”	1.6 mm
For 15 ft (4.5 m) Trim to Fit	KP1958-2	.030 - .035”	0.8-0.9 mm
	KP1958-6	.035 - 3/64”	0.9 - 1.2mm
	KP1958-4	1/16”	1.6 mm
	KP42N354515	.035 - 3/64”	0.9 - 1.2mm
	KP1955-2	1/16”	1.6mm

CHART D

Gun Tube	Part Number
60°	KP1928-1 (400 amp) -2 (300 amp)
45°	KP1929-1 (400 amp) -2 (300 amp)
82°	KP1941-1 (300, 400 amp)

CHART E

Connector Kits[1]					
Product Number	Feeder Type	Power Connector	Trigger Lead Connector	Gas Tube and Fitting	Connector Tools
K466-1	Lincoln[2]	4	4	4	4
K466-2	Tweco Adapted Lincoln 10 Series	4	—	—	4
K466-3	Miller	4	4	—	4
K466-4	Hobart 27	4	4	4	4
K466-5	L-Tec Adapted	4	4	—	4
K466-6	Wirematic & Power Mig	4	4	—	4
K466-7	Hobart Series 2000	4	4	—	4
K466-8	Lincoln[3]	4	4	4	4
K466-9	SP100T and Related Units	4	4	—	4
K466-10	Lincoln 10 Series	4	4	—	4

[1] See Magnum 300 & 400 Parts Manual for part numbers.
[2] Except LN8 or LN9 using 1/16 and larger electrodes.
[3] LN8 or LN9 using 1/16 and larger electrodes.

PARTS LIST OF MAGNUM CONNECTOR KITS

	Part No.
K466-1 Connector Kit (Lincoln Wire Feeders)	
Gas Tubing	T10642-127
Tubing Clamp (2 required)	T13777-4
Connector Assembly, Includes:	S18645
Set Screw	S11604-51
Insulation Tube	T7028-234
Gun Control Cable	M15608
Hose Nipple	T14557-7
Socket Key	T11563-4
Wrench	S18845
K466-2 Connector Kit (For Tweco Adapted Feeders)	
Connector Assembly, Includes:	S18653
Set Screw	S11604-51
"O" Ring (2 required)	T13483-8
Socket Key	T11563-4
Wrench	S18845
Hair Spring Cotter Pin	S19762
K466-3 Connector Kit (For Miller Feeders)	
Connector Assembly (Miller), Includes:	S19760
"O" Ring (2 required)	T13483-8
Connector Cap Assembly (Miller), Includes:	S19761
Set Screw	S11604-51
Gun Control Assembly (Miller)	M16325
Wrench	S18845
Socket Key	T11563-4
Liner Material - .045" (1.2 mm) maximum	S18685-12
Liner Material - 1/16" (1.6 mm) maximum	S18685-13
Liner Material - 5/64" (2.0 mm) maximum	S18685-14
K466-4 Connector Kit (For Hobart Feeders)	
Connector (Hobart)	S19763
Connector Cap Assembly (Hobart), Includes:	S19765
Set Screw	S11604-51
Gun Control Assembly (Hobart)	M16328
Wrench	S18845
Socket Key	T11563-4
Liner Material - .045" (1.2 mm) maximum	S18685-15
Liner Material - 1/16" (1.6 mm) maximum	S18685-16
Liner Material - 5/64" (2.0 mm) maximum	S18685-17
Hose Nipple	T14557-7
Tubing Clamps (2 required)	T13777-4
Gas Tubing	T10642-166
K466-5 Connector Kit (For L-Tec Adapted Feeders)	
Connector Assembly (L-Tec), Includes:	S20044
Set Screw	S11604-51
"O" Ring (2 required)	T13483-8
Socket Key	T11563-4
Wrench	S18845
Gun Control Assembly (L-Tec)	M16520

	Part No.
K466-6 Connector Kit (Wirematic)	
Connector Assembly, Includes:	S18653
Set Screw	S11604-51
"O" Ring (2 required)	T13483-8
Gun Control Assembly	M16325
Socket Key	T11563-4
Wrench	S18845
K466-7 Connector Kit (Hobart Series 2000)	
Connector Assembly, Includes:	S18653
Set Screw	S11604-51
"O" Ring (2 required)	T13483-8
Socket Key	T11563-4
Wrench	S18845
Gun Control Cable Assembly	M18003
K466-8 Connector Kit (Lincoln Wire Feeders)	
Gas Tubing	T10642-127
Tubing Clamp (2 required)	T13777-4
Connector Assembly, Includes:	S18645-2
Set Screw	S11604-51
Insulation Tube	T7028-234
Gun Control Cable	M15608
Hose Nipple	T14557-7
Socket Key	T11563-4
Wrench	S18845
K466-9 Connector Kit (Lincoln SP100T, SP125 & SP170T)	
Connector Assembly, Includes:	S18653-2
Set Screw	S11604-51
"O" Ring (2 required)	T13483-8
Socket Key	T11563-4
Wrench	S18845
Gun Control Cable Assembly	M18003
K466-10 Connector Kit (Lincoln 10 Series)	
Connector Assembly, Includes:	S18653
Set Screw	S11604-51
"O" Ring (2 required)	T13483-8
Socket Key	T11563-4
Wrench	S18845
Gun Control Cable	M15608

CHART A

Contact Tips/ Gas Diffuser	Part Number (Industry Ref.)	English Wire Size	Metric Wire Size
250A/350A	KP2744-035 or KP2744-035-B100	.035”	0.9 mm
	KP2744-045 or KP2744-045-B100	.045”	1.2 mm
	KP2744-052 or KP2744-052-B100	.052”	1.3 mm
	KP2744-116 or KP2744-116-B100	1/16”	1.6 mm
	KP2744-564 or KP2744-564-B100	5/64”	2.0 mm
450A/550A	KP2745-035 or KP2745-035-B100	.035”	0.9 mm
	KP2745-045 or KP2745-045-B100	.045”	1.2 mm
	KP2745-052 or KP2745-052-B100	.052”	1.3 mm
	KP2745-116 or KP2745-116-B100	1/16”	1.6 mm
	KP2745-564 or KP2745-564-B100	5/64”	2.0 mm
Gas Diffuser Asbly:			
250A/350A Thread-On	KP2746-1 or KP2746-1-B25		
250A/350A Slip-On	KP2746-2 or KP2746-2-B25		
450A/550A Thread-On	KP2747-1 or KP2747-1-B25		
450A/550A Slip-On	KP2747-2 or KP2747-2-B25		

CHART B

Gas Nozzles	Part Number (Industry Ref.)	English I.D. Size	Metric I.D. Size
250A/350A Thread-On			
1/8” Recess	KP2742-1-50R	.50”	12.7 mm
	KP2742-1-50R-B25	.50”	12.7 mm
	KP2742-1-62R	.625”	15.9 mm
	KP2742-1-62R-B25	.625”	15.9 mm
Flush	KP2742-1-50F	.50”	12.7 mm
	KP2742-1-50F-B25	.50”	12.7 mm
	KP2742-1-62F	.625”	15.9 mm
	KP2742-1-62F-B25	.625”	15.9 mm
1/8” Stickout	KP2742-1-50S	.50”	12.7 mm
	KP2742-1-50S-B25	.50”	12.7 mm
	KP2742-1-62S	.625”	15.9 mm
	KP2742-1-62S-B25	.625”	15.9 mm
250A/350A Slip-On			
1/8” Recess	KP2742-2-50R	.50”	12.7 mm
	KP2742-2-50R-B25	.50”	12.7 mm
	KP2742-2-62R	.625”	15.9 mm
	KP2742-2-62R-B25	.625”	15.9 mm
Flush	KP2742-2-50F	.50”	12.7 mm
	KP2742-2-50F-B25	.50”	12.7 mm
	KP2742-2-62F	.625”	15.9 mm
	KP2742-2-62F-B25	.625”	15.9 mm
1/8” Stickout	KP2742-2-50S	.50”	12.7 mm
	KP2742-2-50S-B25	.50”	12.7 mm
	KP2742-2-62S	.625”	15.9 mm
	KP2742-2-62S-B25	.625”	15.9 mm
450A/550A Thread-On			
1/8” Recess	KP2743-1-62R	.625”	15.9 mm
	KP2743-1-62R-B25	.625”	15.9 mm
	KP2743-1-75R	.75”	19.1 mm
	KP2743-1-75R-B25	.75”	19.1 mm
Flush	KP2743-1-62F	.625”	15.9 mm
	KP2743-1-62F-B25	.625”	15.9 mm
	KP2743-1-75F	.75”	19.1 mm
	KP2743-1-75F-B25	.75”	19.1 mm
1/8” Stickout	KP2743-1-62S	.625”	15.9 mm
	KP2743-1-62S-B25	.625”	15.9 mm
	KP2743-1-75S	.75”	19.1 mm
	KP2743-1-75S-B25	.75”	19.1 mm
450A/550A Slip-On			
1/8” Recess	KP2743-2-62R	.625”	15.9 mm
	KP2743-2-62R-B25	.625”	15.9 mm
	KP2743-2-75R	.75”	19.1 mm
	KP2743-2-75R-B25	.75”	19.1 mm
Flush	KP2743-2-62F	.625”	15.9 mm
	KP2743-2-62F-B25	.625”	15.9 mm
	KP2743-2-75F	.75”	19.1 mm
	KP2743-2-75F-B25	.75”	19.1 mm
1/8” Stickout	KP2743-2-62S	.625”	15.9 mm
	KP2743-2-62S-B25	.625”	15.9 mm
	KP2743-2-75S	.75”	19.1 mm
	KP2743-2-75S-B25	.75”	19.1 mm

CHART C (250/350/450 Amp)

Cable Liner For Steel	Part Number (Industry Ref.)	English Wire Size	Metric Wire Size
For 15 ft (4.5 m) and less Trim to Fit	KP44-3545-15	.035 - .045”	0.9-1.2 mm
	KP44-116-15	.052 - 1/16”	1.3-1.6 mm
	KP44-564-15	1/16 - 5/64”	1.6-2.0 mm
	KP42-25-15	.025-.030”	0.6-0.8 mm
For cables 25 ft (7.6 m) and less Trim to Fit	KP44-3545-25	.035 - .045”	0.9-1.2 mm
	KP44-116-25	.052 - 1/16”	1.3-1.6 mm
	KP44-564-25	1/16 - 5/64’’	1.6-2.0 mm

Cable Liner for Aluminum	Part Number (Industry Ref.)	English Wire Size	Metric Wire Size
For 10 ft (3 m) Trim to Fit	KP1958-1	.030 - .035”	0.8-0.9 mm
	KP1958-5	.035 - 3/64”	0.9 - 1.2mm
	KP1958-3	1/16”	1.6 mm
For 15 ft (4.5 m) Trim to Fit	KP1958-2	.030 - .035”	0.8-0.9 mm
	KP1958-6	.035 - 3/64”	0.9 - 1.2mm
	KP1958-4	1/16”	1.6 mm
	KP42N354515	.035 - 3/64”	0.9 - 1.2mm
	KP1955-2	1/16”	1.6mm

CHART D

Insulators	Part Number
250A/350A	KP2773-2 or KP2773-2-B25
450A/550A	KP2773-1 or KP2773-1-B25

CHART E

Gun Tube	Part Number
60°	KP2925-60 (300 Amp)
60°	KP2926-60 (400 Amp)

NOTES

LN-8 WIRE FEED UNIT

(Except LN-8F)

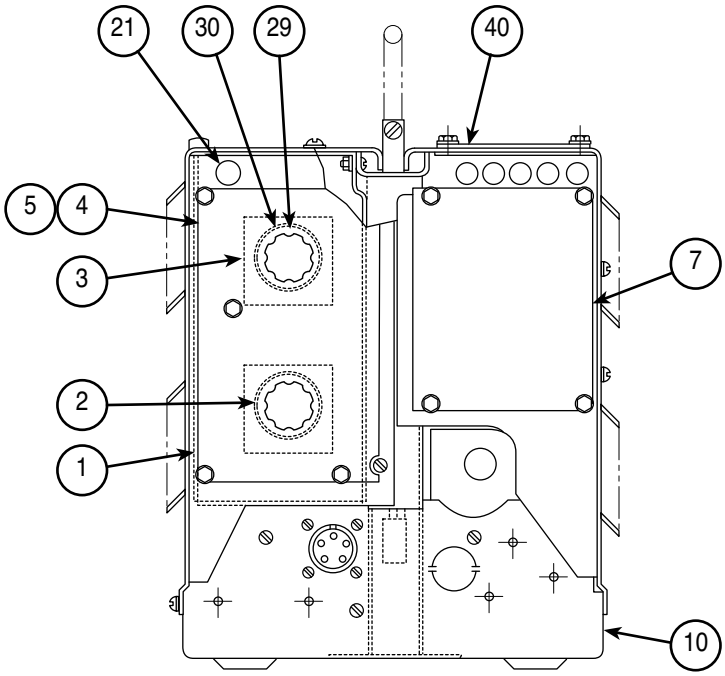

FRONT VIEW

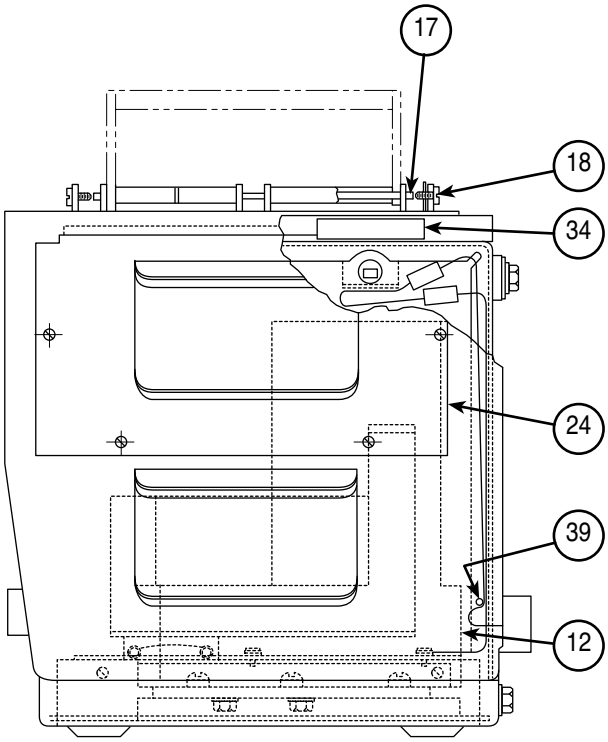

SIDE VIEW

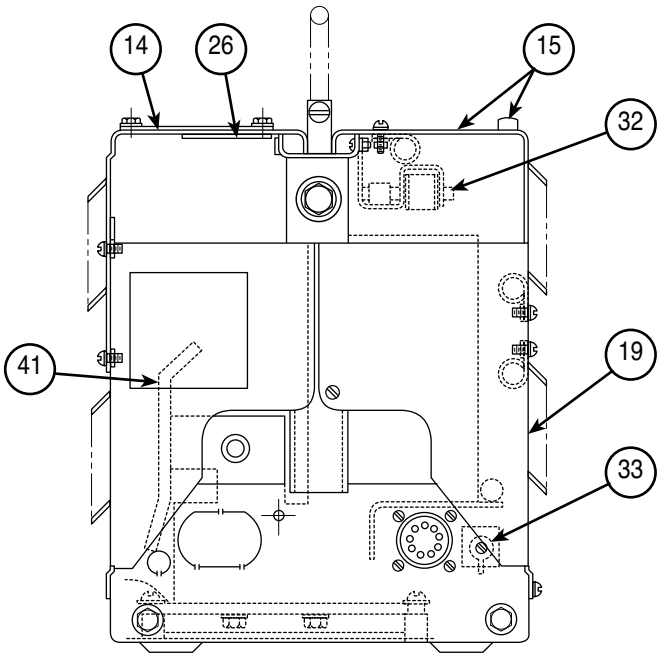

BACK VIEW

L5741-B
11-14-86F

# Indicates a Change This Printing

ITEM	DESCRIPTION	PART NO.	QTY.	1	2	3	4	5	6	7	8	9
1	Instrument Panel Assembly	See P-110-D	1									
2	Potentiometer	T10812-71	1									
3	Potentiometer Insulation	T12792-1	2									
4	Dial Plate (Constant Voltage) (Below Code 9900)	M12229	1									
5	Dial Plate (Variable Voltage) LN-8S & LN-8SE Only	M12230	1									
7	Nameplate (Below Code 7900)	S14629	1									
7	Nameplate (Above Code 7900)	S16029	1									
10	Base Assembly (Below Code 7575)	M11467	1									
10	Base Assembly (Code 7575 to 9100)	L5778	1									
10	Base Assembly (Above Code 9100)	L5778-6	1									
12	Wire Drive Motor & Gear Box Assembly	See Model Index	1									
14	Door Assembly (Below Code 9000)	M11490	1									
14	Door Assembly (Between Code 9000 & 9900)	M14850-1	1									
14	Door Assembly (Above Code 9900)	M14850-3	1									
15	Cover Assembly (Below Code 9000)	M12216	1									
15	Cover Assembly (Between Code 9000 & 9900)	M14851-1	1									
15	Cover Assembly (Above Code 9900)	M14851-4	1									
	Door Bumper (Above Code 9100)	T14882	1									
17	Hinge Pin	M8809-53	1									
18	Self Tapping Screw	S8025-68	2									
19	Warning Decal	T13470	1									
21	Plug Button	T13597-2	1									
22	Trimmer PC Board & Bracket Assembly (Code 7575 thru 7900)											
	(Not Illustrated)	S15679 ø	1									
	Trimmer PC Board	S15680	1									
24	Door Cover Panel (Without Meters Only) (Below Code 9900)	M11662-2	1									
24	Door Cover Panel (Without Meters Only) (Above Code 9900)	M11662-3	1									
26	Drive Roll Decal	S14140	1									
27	Optional Meter Kits (Below Code 7575) (Not Illustrated)	See P-107-J or L	1									
27	Optional Meter Kits (Above Code 7575) (Not Illustrated)	See P-110-A										
29	Knob	T10491	2									
30	Potentiometer	T10812-40	1									
32	Grounding Lead Protector Assembly (Below Code 7900)	S15102										
32	Grounding Lead Protector Assembly (Above Code 7900 to 9100)	S15102-3	1									
33	Resistor	S10404-75	1									
	Round Head Screw	#10-24 x 5.00	1									
	Insulating Washer	T4479-A	2									
34	Reset Decal	T13086-4	1									
35	Resistance Coil (Code 7900 to 9100)	T14104	1									
39	Roll Pin	T9967-22	1									
40	Warning Label	M16196	1									
41	Shunt Assembly	M11502	1									
	Items Not Illustrated:											
	Collar Assembly (Drive Roll Mounting)	T12341	1									
	Button Head Socket Screw (Drive Roll Mounting)	T11551-6	1									
	Key (Drive Roll Mounting)	M8776-31	1									
	Handle (Optional)	S13863	1									

ø This part is obsolete and no longer available.

LN-8 INSTRUMENT PANEL ASSEMBLY

(All Models Except LN-8F Above Code 7575)

NOTE: Obtain both item number and complete description for parts listed. Some older operating manuals were printed with item numbers which do not correspond with recent printings.

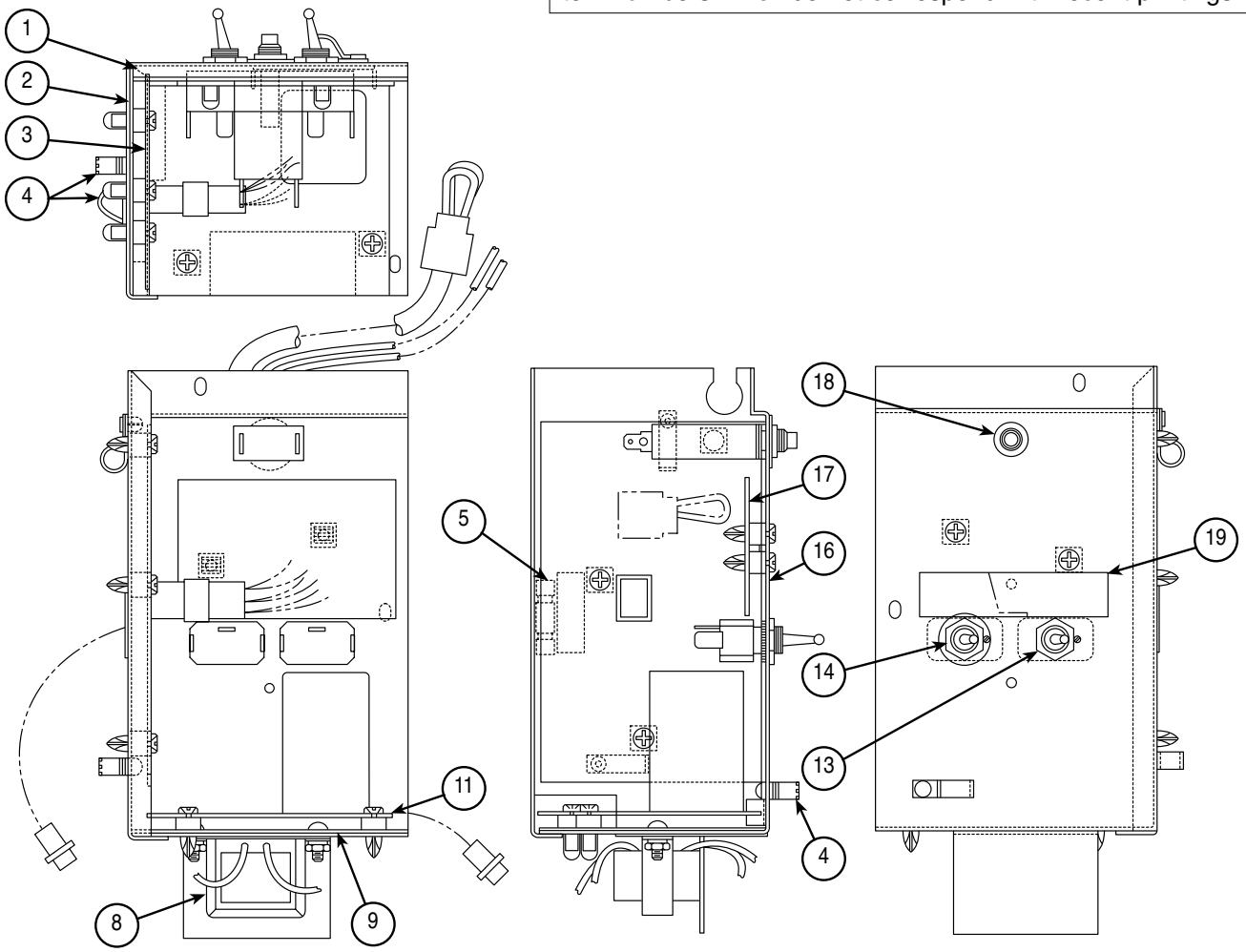

L5742
11-14-86G

# Indicates a Change This Printing

For LN-8N or NE use only the parts marked “X” in Column 1.
For LN-8S or SE use only the parts marked “X” in Column 2.
For LN-8F (Below Code 7575 Only) use only the parts marked “X” in Column 3.

ITEM	DESCRIPTION	PART NO.	QTY.	1	2	3	4	5	6	7	8	9	
1	Instrument Mounting Panel	M12428-1	1	X	X	•							
1	Instrument Mounting Panel	M12428-2	1	•	•	X							
2	Control P.C. Board Insulation (Above Code 7900)	S15961	1	X	X	•							
2	Control P.C. Board Insulation (Below Code 7900)	S14819	1	X	X	X							
3	Control P.C. Board (Above Code 7900)	L5767-1	1	X	X	•							
3	Control P.C. Board (Below Code 7900)	L5040	1	X	X	X							
	Plastic Expansion Nut	S14020-1	3	X	X	X							
	Self Tapping Screw	S8025-14	3	X	X	X							
4	Lead Clamp	T13496-1	3	X	X	X							
5	Decal (Below Code 7575 and Above Code 7900)	T13086-1	1	X	X	X							
5	Decal (Code 7575 thru 7900)	T13086-15	1	X	X	•							
8	Transformer & Receptacle Assembly (Above Code 7900)	S14165-140	1	X	X	•							
8	Transformer Assembly (Below Code 7900)	S14651-1 ø	1	X	X	X							
	Transformer Insulation	T14070	1	X	X	X							
9	Relay P.C. Board Insulation (Above Code 7900)	S14820-1	1	X	X	•							
9	Relay P.C. Board Insulation (Below Code 7900)	S14820 ø	1	X	X	X							
11	Relay P.C. Board (Above Code 8750)	L5769-2	1	X	X	•							
11*	Relay P.C. Board (Code 7900 to 8750)	L5769 Note 1	1	X	X	•							
11*	Relay P.C. Board (Below Code 7900)	L5142-1	1	X	X	X							
	Relay	S13929-9	1	X	X	X							
	Plastic Expansion Nut	S14020-1	2	X	X	X							
	Self Tapping Screw	S8025-14	2	X	X	X							
13	Direction Switch	T13495	1	X	X	X							
14	Interlock Switch	T10800-20	1	X	X	X							
16	Variable Voltage P.C. Board Insulation	S14818 ø	1	•	X	•							#
17	Variable Voltage P.C. Board Assembly	L5039-1	1	•	X	•							
18	Circuit Breaker	T12287-10	1	X	X	X							
19	Decal	T13086-3	1	X	X	•							
	Parts Not Illustrated (Below Code 7900 Only) Unless Otherwise Specified:												
	Fuse Holder	S10289	1	X	X	X							
	Fuse	T10728-14	1	X	X	X							
	Identification Sticker	T12607-14	1	X	X	X							
	Instrument Panel Mounting Bracket	S14768	1	•	•	X							
	Output Polarized Plug (All Codes)	S12021-3	1	X	X	•							
	Input Polarized Connector (All Codes)	S12021-12	1	X	X	•							
	* For replacement of a Relay P.C. Board that has a soldered-to-board relay, also order a relay.												
	Note 1: This P.C. Board can be replaced with the same basic numbered P.C. Board with the same or higher dash number.												

Ø This part is obsolete and no longer available.

LN-8F GENERAL ASSEMBLY

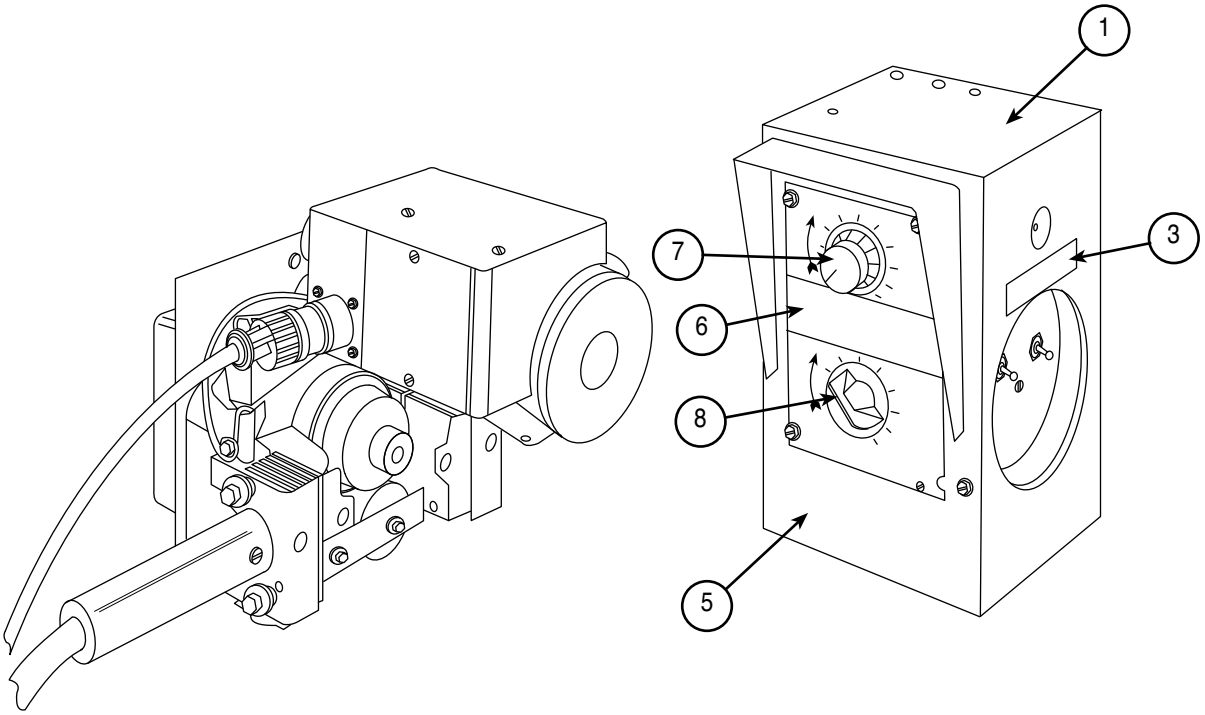

7-30-84

# Indicates a Change This Printing

ITEM	DESCRIPTION	PART NO.	QTY.	1	2	3	4	5	6	7	8	9	
1	Control Box (Above Code 7575)	See P-110-F	1										
1	Control Box Case (Below Code 7575 Only)	L5126	1										
	Instrument Panel Assembly (Below Code 7575 Only)	See P-110-D	1										
	Instrument Panel Assembly (Above Code 7575)	See P-110-G	1										
	Terminal Strip Assembly (With Leads)	S14896-1	1										
	Number Plate	T10726-83	1										
	5” Resistor	S10404-75	1										
	Insulating Washer	T4479-A	2										
	Round Head Screw, Resistor Mounting	10-24 x 5”	1										
3	Decal	T13086-3	1										
5	Box Cover	S14771	1										
6	Dial Plate	M12229	1										
7	‘Volts’ Potentiometer	T10812-40	1										
8	‘Amps’ Potentiometer	T10812-71	1										
8	Potentiometer Knob	T10491	2										
	Insulation	T12792-1	2										
	LN-8 Nameplate	S14629	1										
	Control Box to Wire Feed Unit Cable Assembly, Not Illustrated, Includes: (Below Code 7900)	L5156-15 ø	1										#
	Control Box to Wire Feed Unit Cable Assembly, Not Illustrated, Includes: (Above Code 7900)	L5814-15	1										
	Control Cable, Includes: (Below Code 7900)	L5156-B-15	1										
	Control Cable, Includes: (Above Code 7900)	L5814-B-15	1										
	Female Polarized Plug (90°)	S12022-8	1										
	Electrode Cable (Below Code 7900)	L5156-C-15	1										
	Electrode Cable (Above Code 7900)	L5814-C-15	1										
	Wire Feed Unit Assembly, Includes: (Below Code 7900)	M11813	1										
	Wire Feed Unit Assembly Includes: (Code 7900 to 8825)	M14508	1										
	Wire Feed Unit Assembly Includes: (Above Code 8825)	M11813-1	1										
	Wire Drive Assembly, Includes: (Below Code 7900)	L4477-3	1										
	Wire Drive Assembly, Includes: (Code 7900 to 8825)	L5744-2	1										
	Wire Drive Assembly, Includes: (Above Code 8825)	L6823-2	1										
	Wire Drive Assembly Parts	See Model Index	1										
	Connection Box Assembly, Includes: (Below Code 7900)	M11812	1										
	Connection Box Assembly, Includes: (Above Code 7900)	M11812-1	1										
	Connection Box	L4825	1										
	Terminal Strip	S14872-1	1										
	Number Plate (Below Code 7900)	T10726-82 ø											#
	Number Plate (Above Code 7900)	T10726-120 ø	1										#
	Box Cover	T13193											
	Male Polarized Plug, Input	S12021-1	1										
	Female Polarized Plug, Gun Control Cable	S12021-3	1										
	Collar Assembly (Drive Roll Mounting)	T12341	1										
	Button Head Socket Screw (Drive Roll Mounting)	T11551-6	1										
	Key (Drive Roll Mounting)	M8776-31	1										

ø This part is obsolete and no longer available.

LN-8F CONTROL BOX

(Above Code 7575)

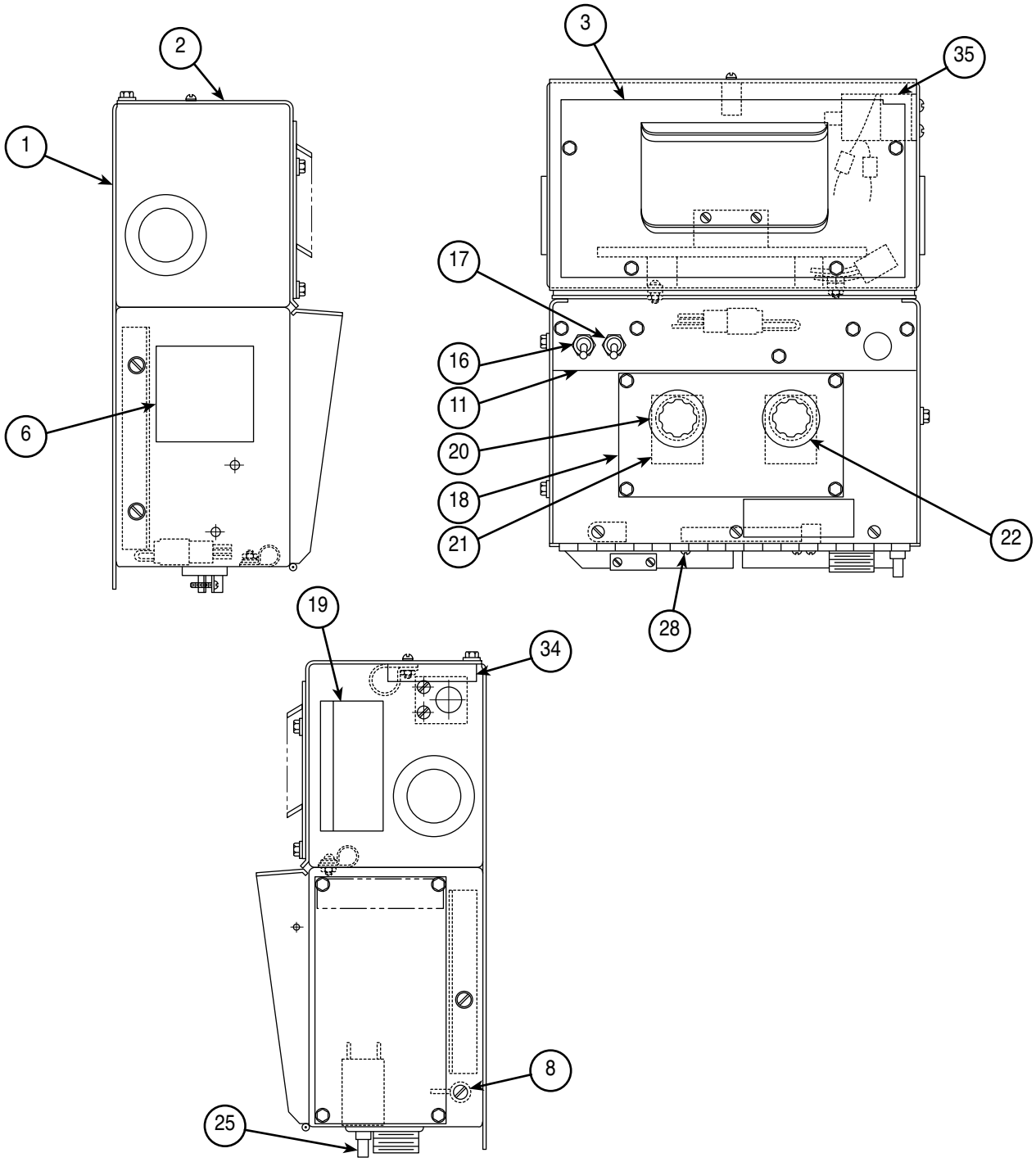

L5815
3-31-83P

# Indicates a Change This Printing

ITEM	DESCRIPTION	PART NO.	QTY.	1	2	3	4	5	6	7	8	9	
1	Control Box & Shunt Assembly, Includes:	L5564 ø	1										#
	Control Box	L5563	1										
	Meter Shunt	S15716	1										
	Insulation Sheet Under Shunt	M13106	1										
	Insulating Tube, Shunt Mounting	T7305-22	2										
	Insulating Washer, Shunt Mounting	S10773-14	4										
2	Box Cover (Below Code 9900)	M13107 ø	1										
2	Box Cover (Above Code 9900)	M13107-1 ø	1										
3	Door Cover Panel (Below Code 9900)	M11662-2	1										
3	Door Cover Panel (Above Code 9900)	M11662-3	1										
6	Instrument Panel Assembly	See P-110-G	1										
8	Resistor	S10404-75	1										
8	Round Head Screw	#10-24 x 5.00	1										
8	Insulation	T4479-A	1										
11	Nameplate (Code 7575 thru 7900)	M13126	1										
11	Nameplate (Above Code 7900)	M13431	1										
16	Interlock Switch	T10800-20	1										
17	Wire Direction Switch	T13495	1										
18	Dial Plate	M13110	1										
19	Warning Plate Decal	T13470	1										
20	Potentiometer	T10812-71	1										
	Knob	T10491	1										
21	Insulation	T12792-1	2										
22	Potentiometer	T10812-40	1										
	Knob	T10491	1										
25	Circuit Breaker	T12287-10	1										
28	Terminal Strip (Code 7575 thru 7900)	S13323-2	1										
28	Terminal Strip (Above Code 7900)	S13323-6	1										
	Number Plate (Code 7575 thru 7900)	T10726-113 ø	1										
	Number Plate (Above Code 7900)	T10726-121 ø	1										
29	Optional Meter Kits	See P-110-A	1										
34	Reset Decal	T13086-2	1										
35	Grounding Lead Protector	S15102-3	1										
	Items Not Illustrated:												
	Input Polarized Connector	S12021-12	1										

ø This part is obsolete and no longer available.

LN-8F INSTRUMENT PANEL

(Above Code 7575 Only)

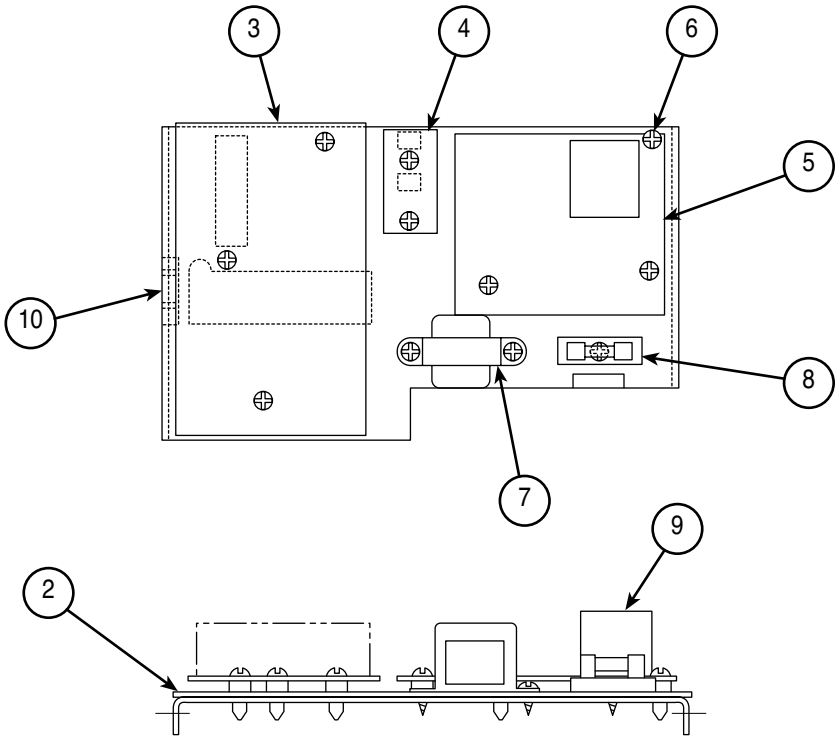

M13109
6-3-77B

For codes 7575 thru 7900 use the parts marked “X” in column 1.
For codes above 7900 use the parts marked “X” in column 2.

# Indicates a Change This Printing

ITEM	DESCRIPTION	PART NO.	QTY.	1	2	3	4	5	6	7	8	9	
	Instrument Panel Assembly, Includes:	M13349	1	•	X								
	Instrument Panel Assembly, Includes:	M13109	1	X	•								
2	Insulation	S15960	1	•	X								
2	Insulation	S15712	1	X	•								
3	Control P.C. Board	L5767	1	•	X								
3	Control P.C. Board	L5040	1	X	•								
4	Trimmer P.C. Board	S15680	1	X	•								
5	Relay P.C. Board (Above Code 8750)	L5769-2	1	•	X								
5*	Relay P.C. Board (Code 7900 to 8750)	L5769 Note 1	1	•	X								
5*	Relay P.C. Board	L5142-1	1	X	•								#
7	Transformer & Receptacle Assembly	S14165-140	1	•	X								
8	Fuse Holder Block	S10289	1	X	•								
8	Fuse	T10728-14	1	X	•								
9	Relay	S13929-6	1	X	X								
	* For replacement of a Relay P.C. Board that has a soldered-to-board Relay, also order an Item 9 Relay.												
	Note 1: This P.C. Board can be replaced with the same basic numbered P.C. Board with the same or higher dash number.												

NOTES

P-107-F.2

GEAR BOX AND DRIVE MOTOR ASSEMBLY

(For LN-8 Codes between 7901 and 8815 & Above 9000 Only)

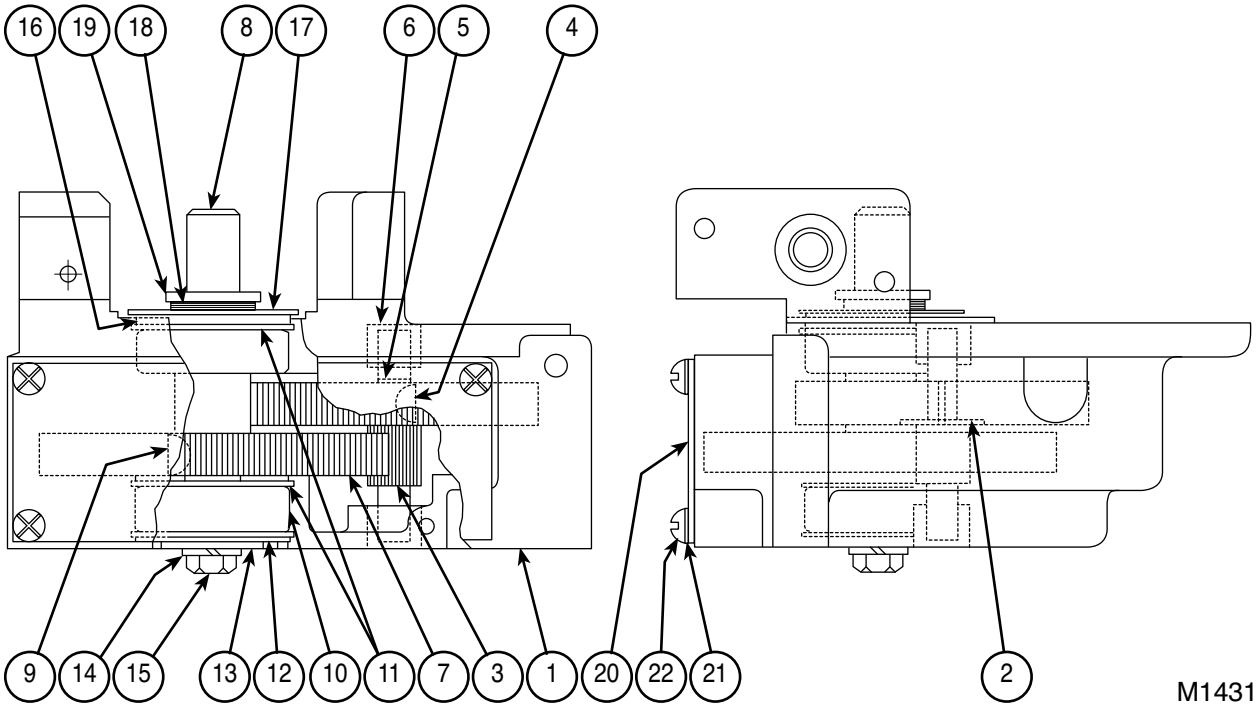

M14310
11-5-82N

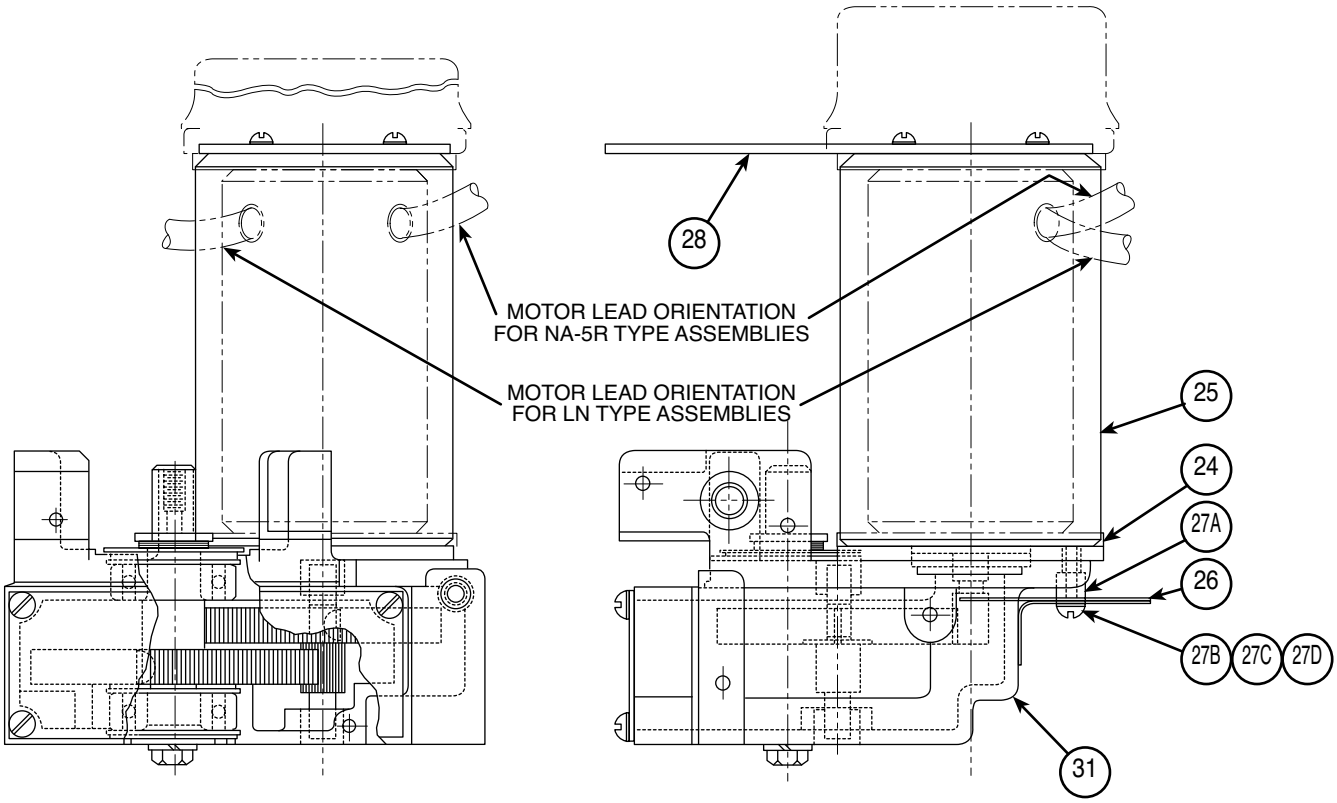

L5743
4-15-83R

# Indicates a Change This Printing

ITEM	DESCRIPTION	PART NO.	QTY.	1	2	3	4	5	6	7	8	9	
	Wire Drive Motor & Gear Box Assembly, Includes:												
	(LN-8N & 8S)	L5743-1	1										
	Wire Drive Motor & Gear Box Assembly, Includes:												
	(LN-8F)	L5743-2	1										
31	Gear Box Assembly, Includes:	M14310-1	1										
1	Gear Box	G1221-3	1										
2	Helical Reduction Gear	S13440	1										
3	Pinion Gear Shaft	S13441	1										
4	Woodruff Key	#304	1										
5	Retaining Ring	T8856-2	1										
6	Needle Bearing	S10116-4	2										
7	Drive Gear	S13442	1										
8	Drive Shaft	S13445	1										
9	Woodruff Key	#404	1										
10	Bearing	M9300-7	2										
11	Snap Ring	S9776-31	2										
12	Beveled Snap Ring	S11910-1	1										
13	Plain Washer	S9262-47	1										
14	Lock Washer	E106A-16	1										
15	Hex Head Screw	3/8-16 x .625	1										
16	Shaft Seal	T13097	1										
17	Plain Washer	S9262-94											
18	Shim (.010 Thick)	S9262-50	As Req'd										
18	Shim (.002 Thick)	S9262-73	As Req'd										
19	Spacer	T11116-3	1										
20	Gear Box Cover	S13453	1										
21	Lock Washer	T9695-1	4										
22	Thread Forming Screw	S9225-30	4										
24	Motor Insulator	M13479-1	1										
25	Drive Motor Assembly, Includes:	M13327-1	1										
	Drive Motor, Includes:	M13312	1										
	Brush & Spring Assembly (Universal Motor)	M12254-1F	2										
	Brush & Spring Assembly (Stature Motor)	M13312-12	2										
	Brush Cap (Universal Motor) Early Design 7/8-27 THD	M9655-7A ø	2										#
	Brush Cap (Universal Motor) Present Design 3/4-27 THD	M9655-7B ø	2										#
	Brush Cap (Stature Motor)	M13312-13	2										
	Pinion	S15013-3	1										
	Roll Pin-Pinion	T9967-33	1										
26	Insulation (Not used on LN-8F)	T13911	1										
27A	Screw Insulator	T14058	3										
27B	Plain Washer	S9262-3	3										
27C	Lock Washer	T4291-A	3										
27D	Round Head Screw	#8-32 x 1.125	3										
31	Gear Box Assembly	See Above	1										

Ø This part is obsolete and no longer available.

WIRE DRIVE MECHANISM

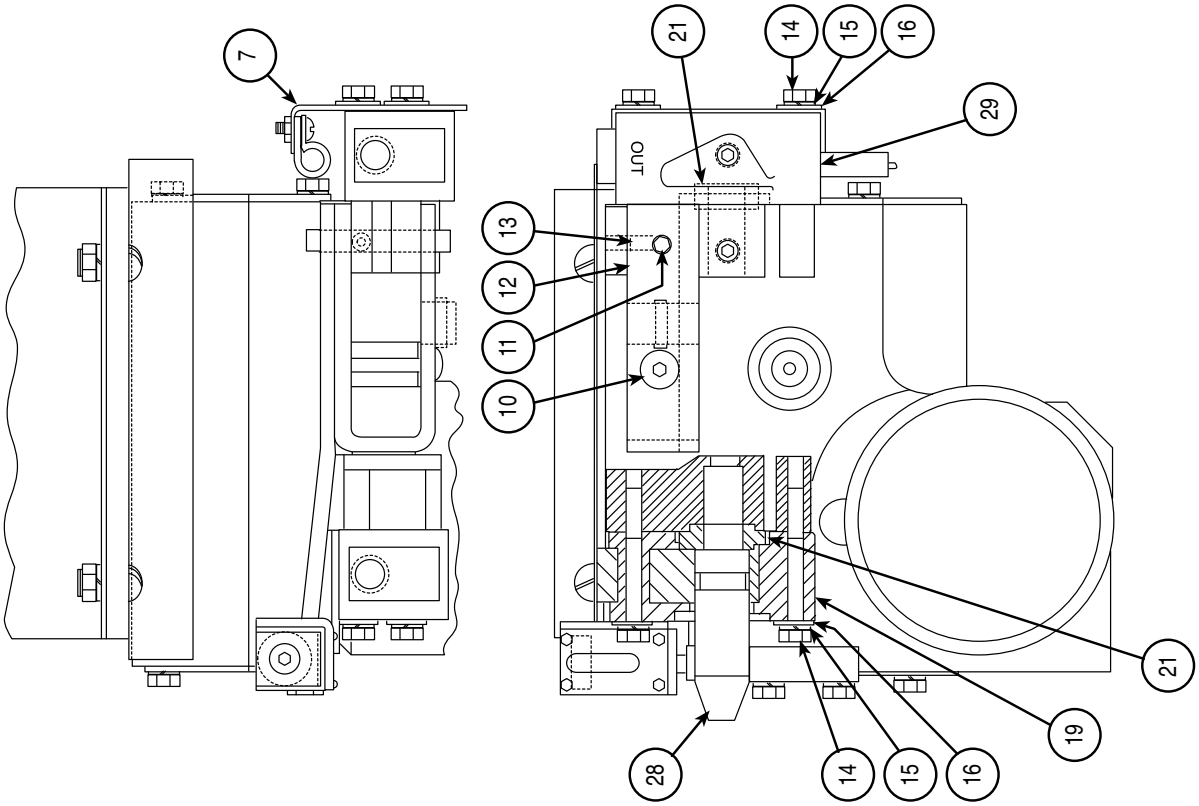

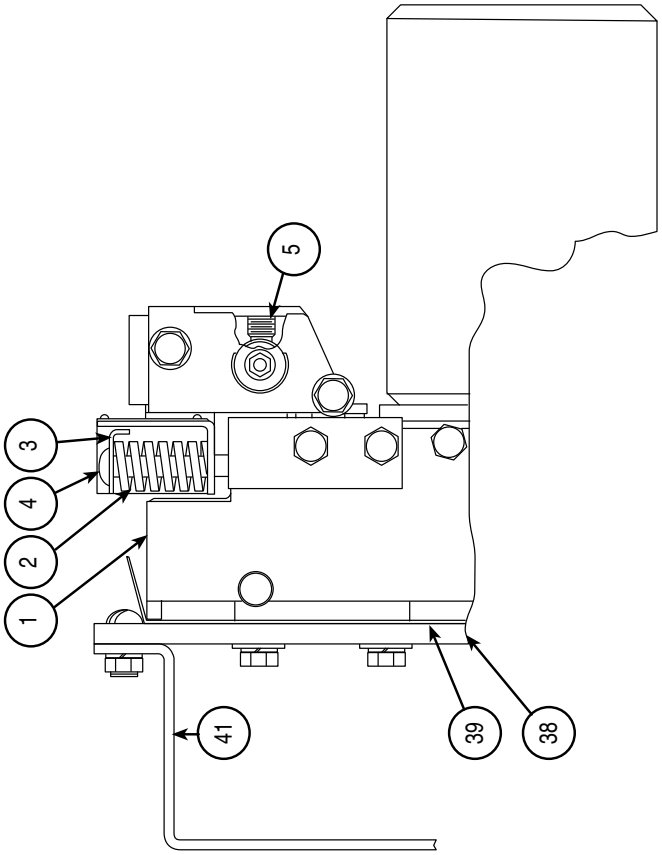

L6823
12-20-84J

# Indicates a Change This Printing

For LN-6 use parts marked “X” in Column 1.
For LN-8N and 8S use parts marked “X” in Column 2.
For LN-8F use parts marked “X” in Column 2.

ITEM	DESCRIPTION	PART NO.	QTY.	1	2	3	4	5	6	7	8	9	
1	Drive Motor & Gear Box Parts (Code 8815 to 9000)	See P-110-H	1	•	X	X							
1	Drive Motor & Gear Box Parts (Below Code 8815 & Above 9000)	See P-107-F or F.2	1	X	X	X							
2	Compression Spring	T10247-10	1										
3	Yoke Setting Indicator	T12689	1										
4	Button Head Socket Screw	T11551-1	1										
5	Hollow Set Screw	S11604-28	4	X	X	X							
7	Reed Switch Energizer Assembly, Includes:	S13920	1	X	•	•							
7	Reed Switch Energizer Assembly, Includes: (Below Code 7900)	S14623	1	•	X	X							
7	Reed Switch Energizer Assembly, Includes: (Above Code 7900)	S14623-1	1	•	X	X							
	Reed Switch	S13913	1	X	•	•							
	Reed Switch (Below Code 7900)	S14622	1	•	X	X							
	Reed Switch (Above Code 7900)	S14622-1	1	•	X	X							
8	Shunt Assembly (Not Illustrated)	M11502	1	X	X	•							
10	Button Head Socket Screw	T11551-5	1	X	X	X							
11	Pivot Pin (Below Code 8715)	T12206-3	1	X	X	X							
11	Pivot Pin (Above Code 8715)	T12206-2	1	X	X	X							
12	Yoke Assembly	S13454	1	X	X	X							
13	Hollow Set Screw (Below Code 8715)	S11604-8	1	X	X	X							
13	Hollow Set Screw (Above Code 8715)	S11604-35 ø	1	X	X	X							
14	Hex Head Cap Screw	1/4-20 x 2.00	4	X	X	X							
15	Lock Washer	E106A-2	4	X	X	X							
16	Plain Washer	S9262-23	4	X	X	X							
19	Incoming Conductor Block	L6872-1	1	X	X	X							
21	Locator Bushing	T12189	2	X	X	X							
28	Incoming Wire Guide	T12272	1	X	X	X							
29	Outgoing Conductor Block	L6872-2	1	X	X	X							
38	Gear Box Mounting Plate	M11460	1	X	X	X							
39	Gear Box Insulation	M12137	1	X	X	X							
41	Feed Unit Mounting Bracket (LN-8F Only)	M12616	1	•	•	X							
	Thermostat (LN-8 Only Below Code 7900) (Not Illustrated)	T13359-1	1	•	X	X							
*	**NOTE**: These items are no longer part of assembly but they are included with parts orders of entire assembly.												
23	Button Head Socket Screw	T11551-6	1	X	X	X							
24	Collar Assembly	T12341	1	X	X	X							
26	Key	M8776-31	1	X	X	X							#
	NOTE: These items are not part of assembly and must be purchased separately or in kit form.												
9	Idle Roll Assembly	See Table	1	X	X	X							
22	Incoming Guide Tube	See Table	1	X	X	X							
25	Drive Roll and Gear Assembly	See Table	1	X	X	X							
27	Outgoing Guide Tube	See Table	1	X	X	X							
30	Outgoing Guide Insert	See Table	1	X	X	X							

WIRE SIZE	CONVERSION KIT	ITEM 9	ITEM 22	ITEM 25	ITEM 27	ITEM 30
.030 - .035S	KP502-0.35	S12722-035	S13492-035	S13343-035	S12548-035	S12553-035
.035A	KP503-.035A	S17731-035	S13492-035	S17729-035 ø	S12548-035	S12553-035
.045	KP502-.052	S12722-052	S13492-052	S13343-052	S12548-052	S12553-052
3/64A	KP503-3/64A	S17731-3/64	S13492-052	NSS	S12548-052	S12553-052
.052	KP502-.052	S12722-052	S13492-052	S13343-052	S12548-052	S12553-052
1/16S	KP502-1/16	S12722-1/16	S13492-1/16	S13343-1/16	S12548-1/16	S12553-1/16
1/16A	KP503-1/16A	S17731-1/16	S13492-1/16	S17729-1/16 ø	S12548-1/16	S12553-1/16
.068	KP502-3/32	S12722-3/32	S13492-3/32	T12057-3/32	S12554-3/32	S12725-3/32
5/64	KP502-3/32	S12722-3/32	S13492-3/32	T12057-3/32	S12554-3/32	S12725-3/32
3/32	KP502-3/32	S12722-3/32	S13492-3/32	T12057-3/32	S12554-3/32	S12725-3/32
7/64	KP502-.120	S12722-120	S13492-120	T12057-120	S12554-120	S12725-120
.120	KP502-.120	S12722-120	S13492-120	T12057-120	S12554-120	S12725-120

Ø This part is obsolete and no longer available.

NSS - Not sold separately.

NOTES

AMMETER-VOLTMETER KIT

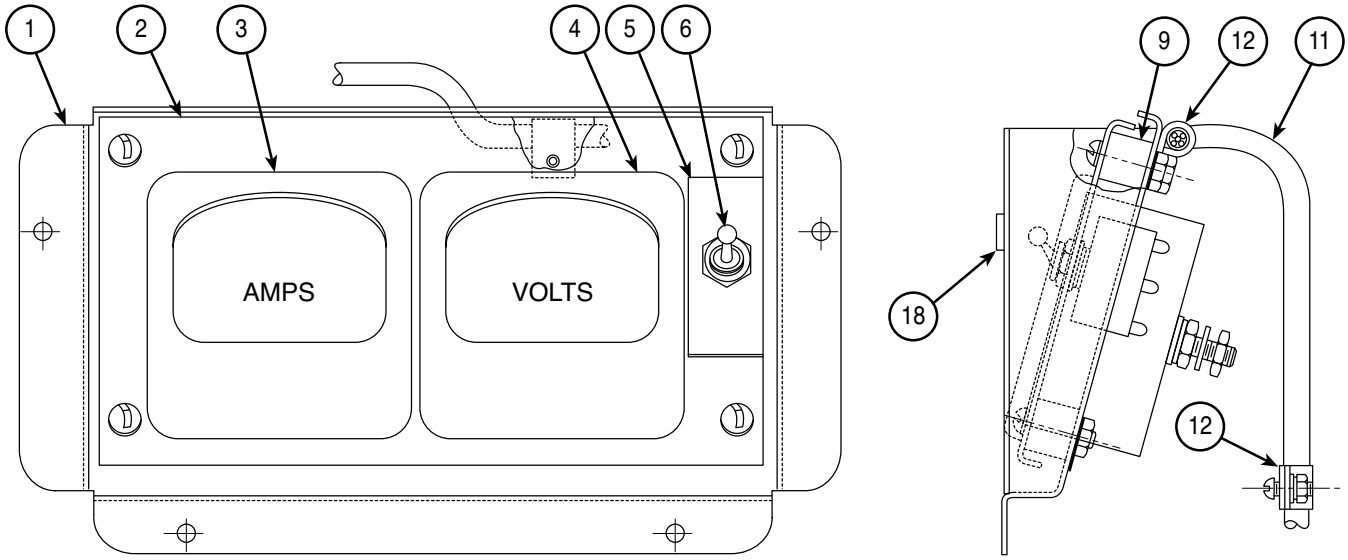

# Indicates a Change This Printing

ITEM	DESCRIPTION	PART NO.	QTY.	1	2	3	4	5	6	7	8	9	
	Meter Kit, Includes:	Order K197	1										
1	Meter Housing	L4753	1										
2	Meter Panel	M11487	1										
3	Ammeter	M10485-4	1										
4	Voltmeter	M10486-3	1										#
5	Polarity Switch Plate	T13096	1										
6	Polarity Switch	T13111	1										
9	Shock Mounting	T13003	4										
11	Cable	M11521	1										
12	Lead Clip	T12563-4	2										
13	Self Tapping Screw	S8025-12	1										
18	Meter Guard	S10509-60	1										
	Shunt (Not Illustrated)	See P-107-G	1										

WIRE FEED SPEED METER-VOLTMETER KIT

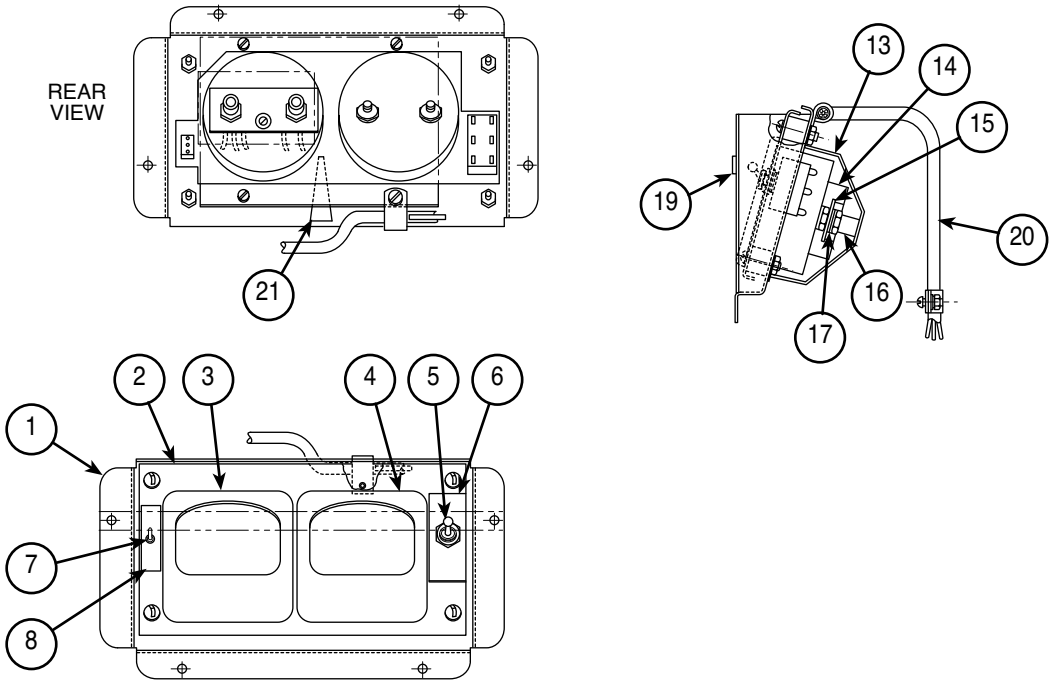

# Indicates a Change This Printing

ITEM	DESCRIPTION	PART NO.	QTY.	1	2	3	4	5	6	7	8	9
	Meter Kit, Includes:	K207	1									
1	Meter Housing	L4753	1									
2	Meter Panel	M11487	1									
3	Wire Feed Speed Meter	M12653-1	1									
4	Voltmeter	M10486-3	1									
5	Polarity Switch	T13111	1									
6	Polarity Switch Plate	T13096	1									
7	Toggle Switch	T13381	1									
8	Switch Plate	T13096-1	1									
13	Insulated Meter Shield	M12663 ø	1									
14	P.C. Board Insulation	S15157 ø	1									
15	P.C. Board Assembly	S15158	1									
16	Tubing	E2106/1:219-41	2									
17	Lockwasher	E106A-2	2									
19	Meter Guard	S10509-60	1									
21	Calibration Tool	T13660	1									

#

Ø This part is obsolete and no longer available.

INPUT CABLE AND EXTENSION CABLE ASSEMBLIES

# Indicates a Change This Printing

ITEM	DESCRIPTION	PART NO.	QTY.	1	2	3	4	5	6	7	8	9
	LN-6 Power Input Cable Assembly, Includes:	K164*	1									
	Control Cable Assembly, Includes:	L4700-B* ø	1									
	Amphenol Connector (Female)	S12020-11	1									
	Amphenol Connector (Male)	S12020-12	1									
	Amphenol Connector Clamp	S12024-2	2									
	Electrode Cable Assembly	L4700-C*	1									
	LN-8 & LN-9 Power Input Assembly, Includes:	K196*	1									
	Control Cable Assembly, Includes:	L5027-B*	1									
	Amphenol Connector (Female)	S12020-8	1									
	Amphenol Connector (Male)	S12024-2	1									
	Electrode Cable Assembly	L5027-C*	1									
	LN-6NE & LN-6SE Extension Cable Assembly, Includes:	M11518**	1									
	Control Cable Assembly, Includes:	M11517**	1									
	Amphenol Connector (Female)	S12020-11	1									
	Amphenol Connector (Male)	S12023-3	1									
	Amphenol Connector Clamp	S12024-2	2									
	Conductor Cable Assembly	L4702**	1									
	LN-8NE, 8SE, 9NE & 9SE Extension Cable Assembly Includes:	M12220**	1									
	Control Cable Assembly, Includes:	M12219**	1									
	Amphenol Connector (Female)	S12020-8	1									
	Amphenol Connector (Male)	S12023-2	1									
	Amphenol Connector Clamp	S12024-2	2									
	Conductor Cable Assembly	L4702**	1									
	Flux Hose, 22-1/2 Ft. (Req'd. For All Submerged Arc Machines)	T10642-82 ø	1									
	Flux Hose, 45 Ft. (Req'd. For All Submerged Arc Machines)	T10642-83	1									
	Electrode Cable, 22-1/2 Ft. (Req'd. On All Machines Above 450 Amps)	M5906-106	1									
	Electrode Cable, 45 Ft. (Req'd. On All Machines Above 450 Amps)	M5906-104	1									
	* Specify Cable Length and Maximum Current Draw Thru Cable. ** Specify " 22-1/2 Ft." or " 45 Ft." as appropriate.											

ø This part is obsolete and no longer available.

50 AND 60# WIRE REEL SUPPORT

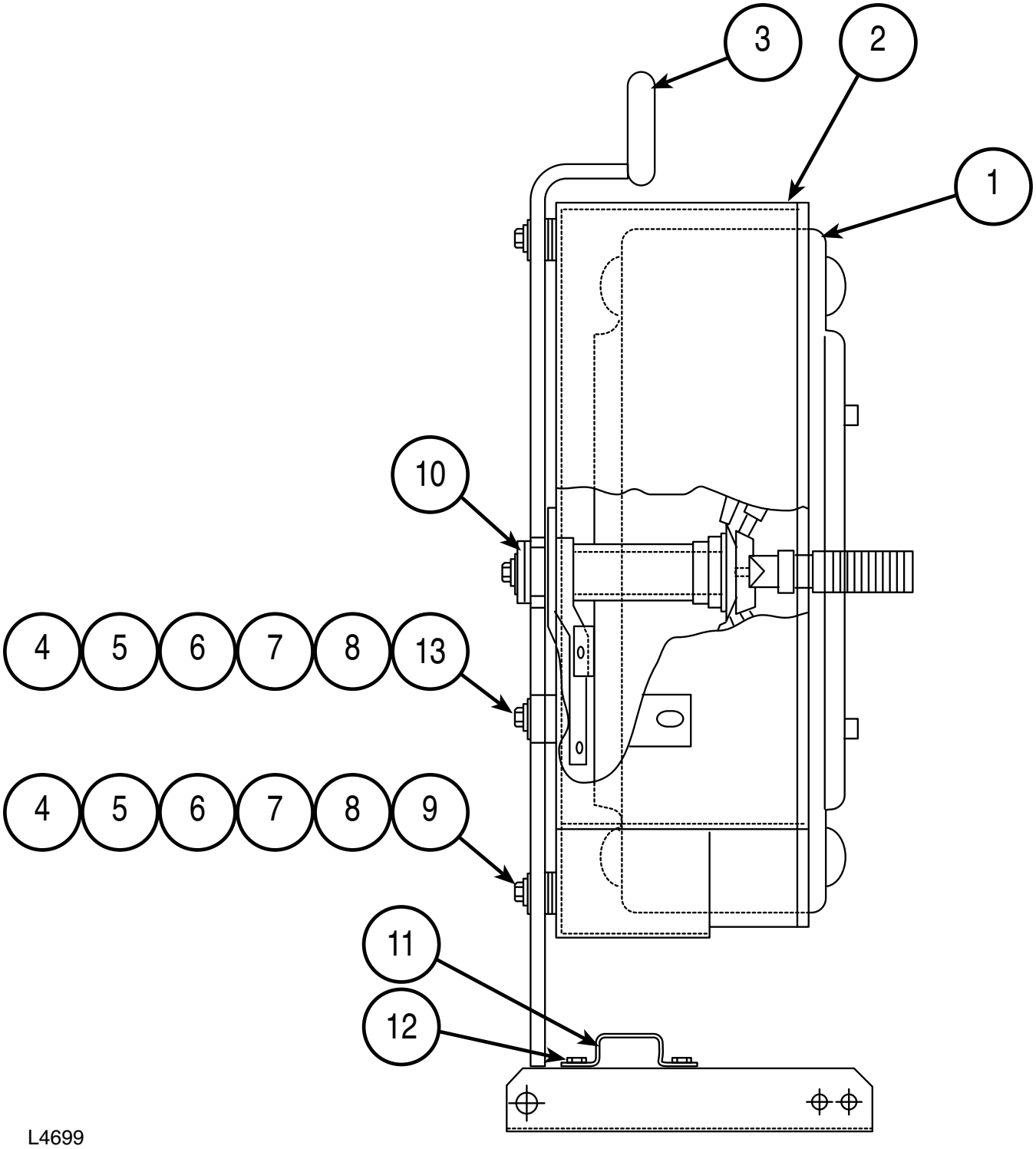

# Indicates a Change This Printing

For LN-6N, 6S, 7, 8N, 8S, 9HN and 9S (K303 Wire Reel Open Shroud), use Column 1. For Enclosed LN-6NE, 8NE, 9NE and 9SE, use Column 2. For LN-7 (K376 Wire Reel, No Shroud), use Column 3. For lightweight LN-6NE, 6SE, 8NE, 9NE and 9SE, use Column 4. For LN-22 use Column 5. For K445 use Column 6.

ITEM	DESCRIPTION	PART NO.	QTY.	1	2	3	4	5	6	7	8	9	
	LN-6, LN-7, LN-8 & LN-9 Wire Reel Support Assembly, Includes:	L4699-2	1	X	X	•	•	X	•				
	LN-7 Wire Reel Support Assembly, Includes:	L4959-2	1	•	•	X	•	•	•				
	LN-7 Wire Reel Support Assembly, Includes:	L4959-3	1	•	•	•	•	•	X				
1	Wire Reel	L4604	1	X	X	X	•	X	X				
1	Wire Reel	S18179	1	•	•	•	•	•	X				
2	Wire Reel Housing (For LN-7, K376 Reel, See **Note 1**)	S13858	1	X	X	•	•	X	•				
3	Reel Support	L4680	1	X	X	X	•	X	X				
4	Plain Washer	S9262-23	6	X	X	•	•	X	•				
5	Lock Washer	E106A-2	3	X	X	•	•	X	•				
6	1/4-20 HN	CF000017	3	X	X	•	•	X	•				#
7	1/4-20 x 1.50 HHCS	CF000141	3	X	X	•	•	X	•				#
8	Insulating Washer	S10773-41	12	X	X	•	•	X	•				
9	Insulating Tube	T7028-90	1	X	X	•	•	X	•				
10	Reel Mounting Shaft Assembly	See P-107-P	1	X	X	X	•	X	•				
10	Reel Mounting Shaft Assembly	Order K162-H	1	•	•	•	•	•	X				
11	Cable Clamp	S16819	1	X	X	X	•	X	X				
12	Thread Cutting Screw	S9225-8	2	X	X	X	•	X	X				
13	Insulating Tube	T7028-180	2	X	X	•	•	X	•				
	Optional Door Assembly, Includes:	M11514 **Note** 1	1	X	X	X	•	X	X				
	Door and Hinge Welded Assembly	L4692	1	X	X	X	•	X	X				
	Catch	T12652	1	X	X	X	•	X	X				
	Sealing Panel	S14049	1	X	X	X	•	X	X				
	Sealing Panel Mounting Plate	S14067	2	X	X	X	•	X	X				
	LN-XNE & LN-XSE Fully Wire Reel Support Assembly, Includes all Above plus:	L4745 ø	1	•	X	•	•	•	X				
	LN-22 Fully Enclosed Wire Reel Support Assembly, Includes all above plus:	L4745-2	1	•	•	•	•	X	•				
	Hand Crank Assembly	See P-107-R	1	•	X	•	•	•	X				
	Wire Feed Unit Handle	S13863	1	•	X	•	•	•	X				
	LN-XNE Lightweight Wire Reel Support Assembly, Includes:	L5369-2 ø	1	•	•	•	X	•	•				
	Wire Reel	L4604	1	•	•	•	X	•	•				
	Hand Crank Assembly	See P-107-R	1	•	•	•	X	•	•				
	Cage Type Wire Reel Support	L5368	1	•	•	•	X	•	•				
	Wire Feed Unit Handle	S13863	1	•	•	•	X	•	•				
	Reel Mounting Shaft Assembly (For 2" I.D. Spools)	Order K162	1	•	•	•	X	•	•				
	Reel Mounting Shaft Assembly (Standard)	M12460	1	•	•	•	X	•	•				

NOTE 1: To equip an LN-7 with a wire reel cover kit order S14543. Includes items 2, 4 through 9 and 13. For LN-7, K376 or K445 Reel, S14543 must also be installed when a K1898-1 door is to be installed.

Ø This part is obsolete and no longer available.

STAND ASSEMBLY FOR READI-REEL

(K377)

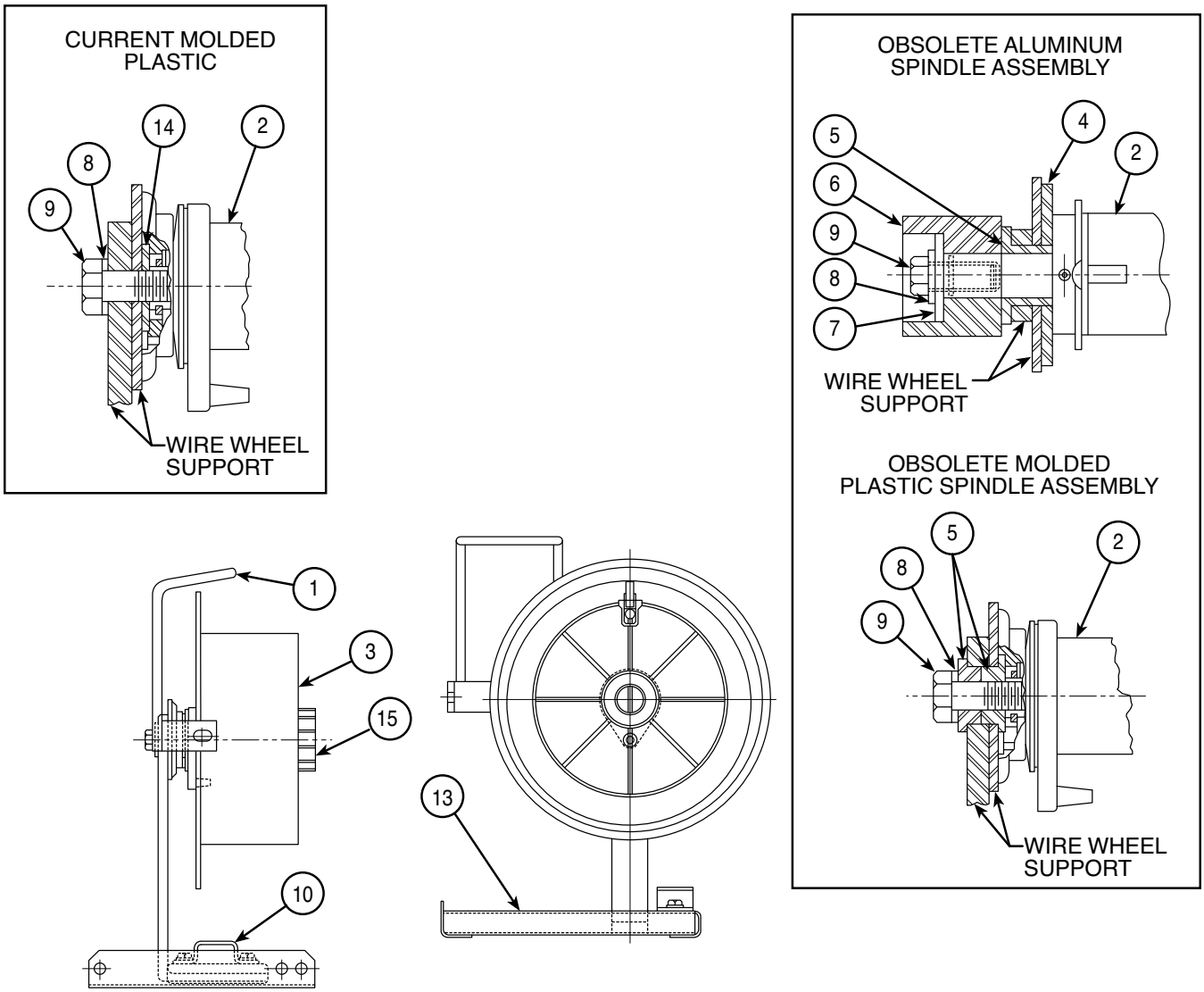

L6940
12-19-85G

For Obsolete Molded Plastic Spindle Assembly Use Column 1.
For Obsolete Aluminum Spindle Assembly Use Column 2.
For Current Molded Plastic Assembly Use Column 3.

# Indicates a Change This Printing

ITEM	DESCRIPTION	PART NO.	QTY.	1	2	3	4	5	6	7	8	9	
-													
1	Wire Reel Support Assembly	L6831-3 ø	1	X	X	X							#
2	Wire Reel Shaft Assembly	M14511	1	X	•	•							
2	Spindle Assembly	M14935	1	•	X	X							
3	Readi-Reel Adapter	K363-P	1	X	X	X							
4	Insulating Washer	S10773-52	1	X	•	•							
5	Insulator Bushing	T14816	1	X	•	•							
5	Bushing	T14844	1	•	X	•							
6	Brake Disc Spacer	T12967-1	1	X	•	•							
7	Plainwasher	S9262-14	1	X	•	•							
8	Lockwasher	E106A-15	1	X	X	X							
9	Hex Head Screw	1/2-13 x 1.00	1	X	•	•							
9	Hex Head Screw	1/2-13 x 1.75	1	•	X	X							
10	Cable Clamp	S16819	1	X	X	X							
	Thread Rolling Screw	S9225-8	2	X	X	X							
12	Retaining Collar	S13871	1	X	•	•							
13	Readi-Reel Decal	T13086-44	1	X	X	X							
14	Plainwasher	S9262-14	1	•	•	X							
15	**Retaining Collar**	**M14587-1**	**1**	•	•	**X**							
	Optional - Not Illustrated												
	10# Wire Reel Spacer	S18221	1	X	X	X							

Ø This part is obsolete and no longer available.

P-125-O

STAND ASSEMBLY FOR 14 POUND REEL

(K378)

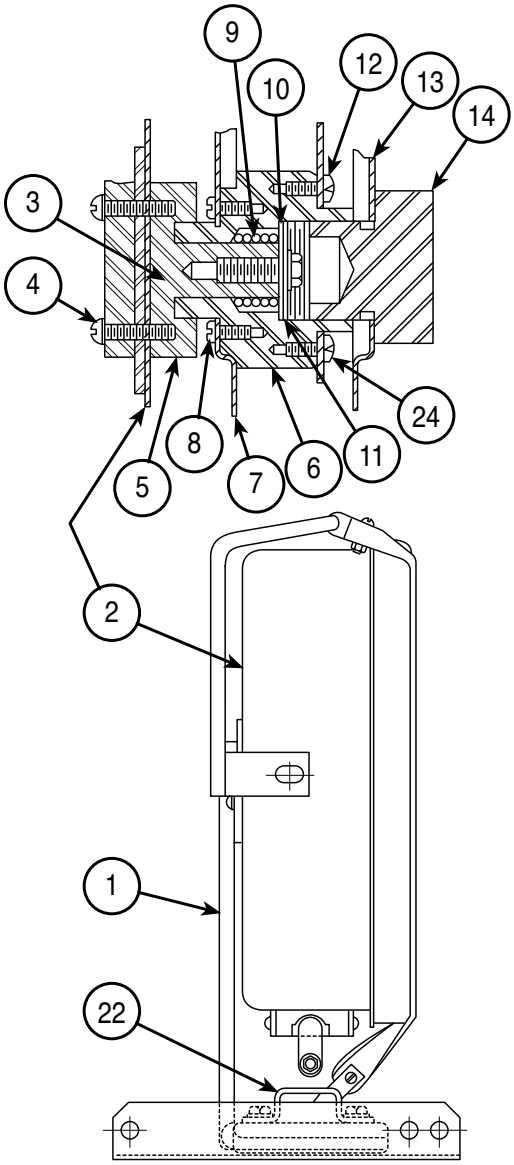

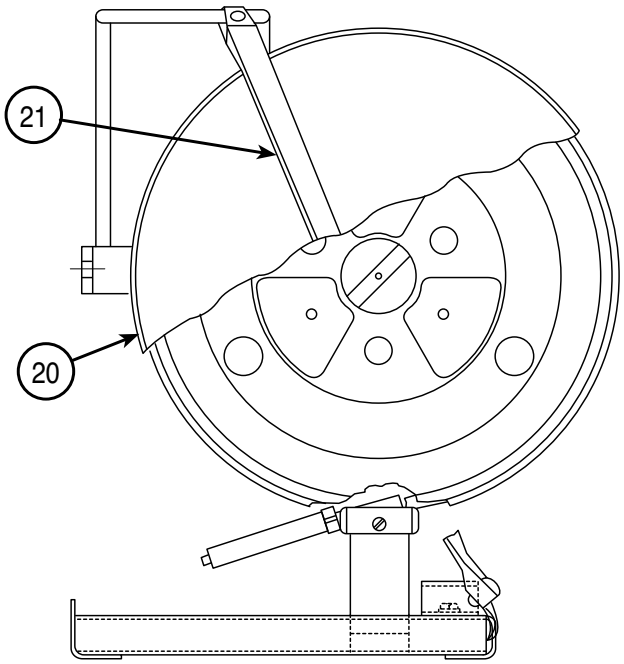

Use only the parts marked “X” in the column under the heading number called for in the model index page.

# Indicates a Change This Printing

ITEM	DESCRIPTION	PART NO.	QTY.	1	2	3	4	5	6	7	8	9	
1	Wire Reel Support Assembly	L6831-3 ø	1	X									#
2	Wire Reel Housing, Includes:	S17069-2	1	X									
	Housing	M11940	1	X									
	Wire Sheath	T14800	1	X									
	Wire Sheath Insulating Block	S17068	1	X									
	Support Washer	S15094	1	X									
3	Axle	S13954	1	X									
4	Round Head Screw	#10-24 x .875	4	X									
	Lockwasher	E106A-1	4	X									
5	Washer	T13984	1	X									
6	Axle Housing	S13953	1	X									
7	Wire Reel Cover (Back)	M11574-2	2	X									
8	Self Tapping Screw	S8025-22	4	X									
9	Spring	T11862-8	1	X									
10	Plainwasher	S9262-45	1	X									
11	Insulating Washer	S10773-49	1	X									
12	Hex Head Screw	5/16-18 x .75	1	X									
	Lockwasher	E106A-3	1	X									
	Plainwasher	S9262-61	1	X									
13	Wire Reel Cover (Front)	M11574-2	1	X									
14	Axle Nut	S13956	1	X									
20	Housing Cover	M11578	1	X									
	Decal	S118932	1	X									
21	Cover Retaining Strap Assembly	S15891	1	X									
22	Cable Clamp	S16819	1	X									
	Thread Cutting Screw	S9225-8	2	X									
23	Coil Support Disc	S17060	1	X									
24	Thread Cutting Screw	S9225-30	2	X									

Ø This part is obsolete and no longer available.

WIRE REEL SHAFT

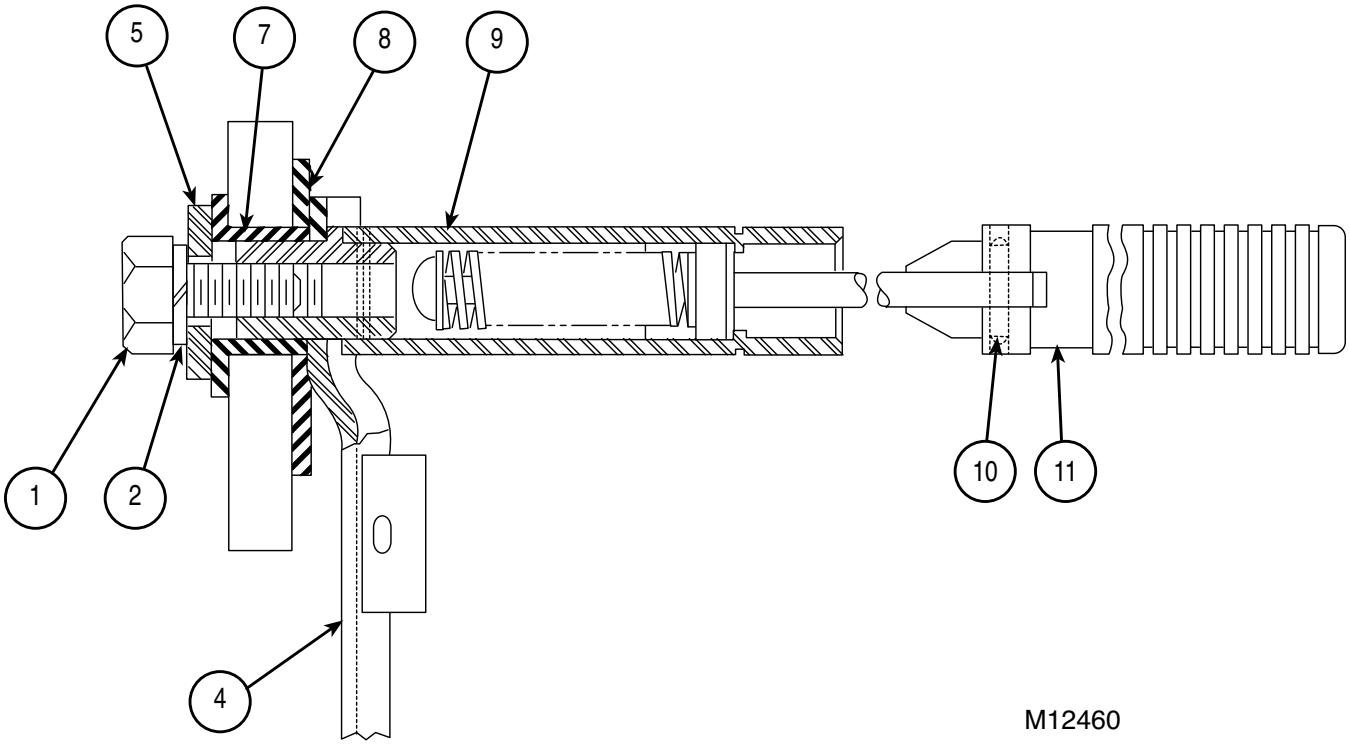

# Indicates a Change This Printing

For All LN-6, LN-7, LN-8S, 8N, 8SE, LN-9S, 9N, 9SE, 9NE, 9NH and LN-22, use Column 1. For LN-8F, LN-9F and LN-9FH, use Column 2. For SP-200, use Column 3.

ITEM	DESCRIPTION	PART NO.	QTY.	1	2	3	4	5	6	7	8	9	
	Reel Mounting Shaft Assembly, Includes:	M12460	1	X	•	•							
	Reel Mounting Shaft Assembly, Includes:	M12908	1	•	X	•							
	Reel Mounting Shaft Assembly, Includes:	M12460-1	1	•	•	X							
1	Hex Head Bolt	1/2-13 x 1.00	1	X	X	X							
2	Lock Washer	E106A-15	1	X	X	X							
4	Brake Assembly, Includes:	S14882*	1	X	•	•							
4	Brake Assembly, Includes:	S14882-1	1	•	X	X							
	Brake	T13519	1	X	X	X							
	Cotter Pin	S10750-19	1	X	X	X							
5	Plain Washer (1.38 O.D.)	S9262-14	1	X	X	X							#
5	Plain Washer (1.50 O.D.)	S9262-119	1	•	X	•							
7	Insulator Bushing	T14816	1	X	•	X							
8	Insulating Washer	S10773-52	1	X	•	X							
9	Wire Reel Shaft Assembly	S16253	1	X	•	X							
9	Wire Reel Shaft Assembly	S15492	1	•	X	•							
10	Roll Pin	T9967-9	1	X	X	X							
11	Pull Knob	S11038	1	X	X	X							
*	LN-6 and LN-7 welders built before November 1972 did not have the adjustable brake (Item 4). If a shaft or fixed brake assembly is needed, order the M12460 Assembly.												

HAND CRANK ASSEMBLY

LN-6, LN-7, LN-8 and LN-9

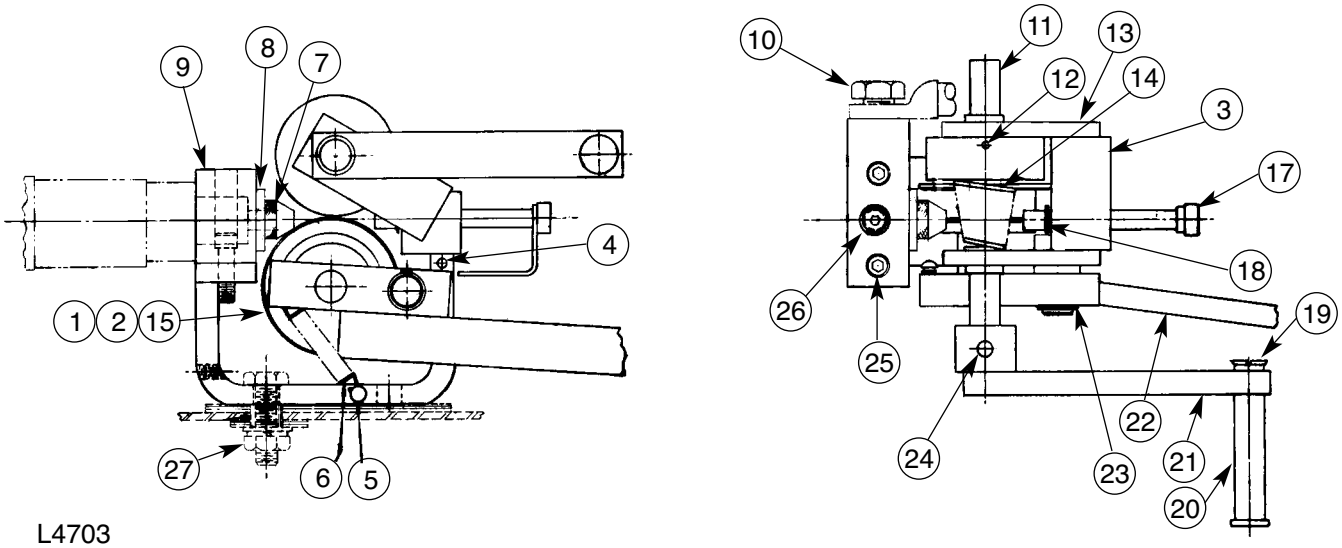

L4703

For All LN-6, LN-7, LN-8S, 8N, 8SE, LN-9S, 9N, 9SE, 9NE, 9NH and LN-22, use Column 1. For LN-8F, LN-9F and LN-9FH, use Column 2. For SP-200, use Column 3.

# Indicates a Change This Printing

ITEM	DESCRIPTION	PART NO.	QTY.	1	2	3	4	5	6	7	8	9	
	Hand Crank Assembly, Includes:	L4703 ø	1										
1	Plain Washer	S9262-120	1										
2	Hex head Screw	3/8-16 x .50	1										
3	Bracket Assembly	M10965 ø	1										#
4	Lever Arm Stop pin	T9967-4	1										
5	Drive Screw	S8025-7	2										
6	Tension Spring	T11514	1										
7	Guide Tube	S13686	1										
8	Spacer Washer	S9262-56	1										
9	Conductor Block	S13687	1										
10	Hex head Screw	1/2-13 x .75	1										
11	Shaft	T12650-1	1										
12	Roll Pin	T9967-31	1										
13	Drive Roll	S12805	1										
14	Conical Spring	T12648	1										
15	Idle Roll (1/16 thru .120)	T12556-4	1										
17	Incoming Guide Tube	T12654	1										
18	Retaining Ring	S9776-1	1										
19	Flat Head Screw	5/16-18 x 1.25	1										
20	Handle	S13397	1										
21	Crank Arm Assembly	S13392	1										
22	Lever Arm Assembly	S13404	1										
23	Retaining Ring	S9776-3	1										
24	Fiber Pin	T8433	1										
25	Socket Head Cap Screw	T9447-10 ø	2										
26	Set Screw	S11604-11	1										
27	Hex Head Screw	3/8-16 x 1.25	2										
	Insulating Tube	T7305-4	2										
	Insulating Washer	S10773-19	2										
	Plain Washer	S9262-120	2										
	Lock Washer	E106A-4	2										
	Hex Nut	3/8-16	2										
	Insulating Pad	T8477-12	1										

Ø This part is obsolete and no longer available.

FLUX TANK

(LN-6, LN-7, LN-8 and LN-9)

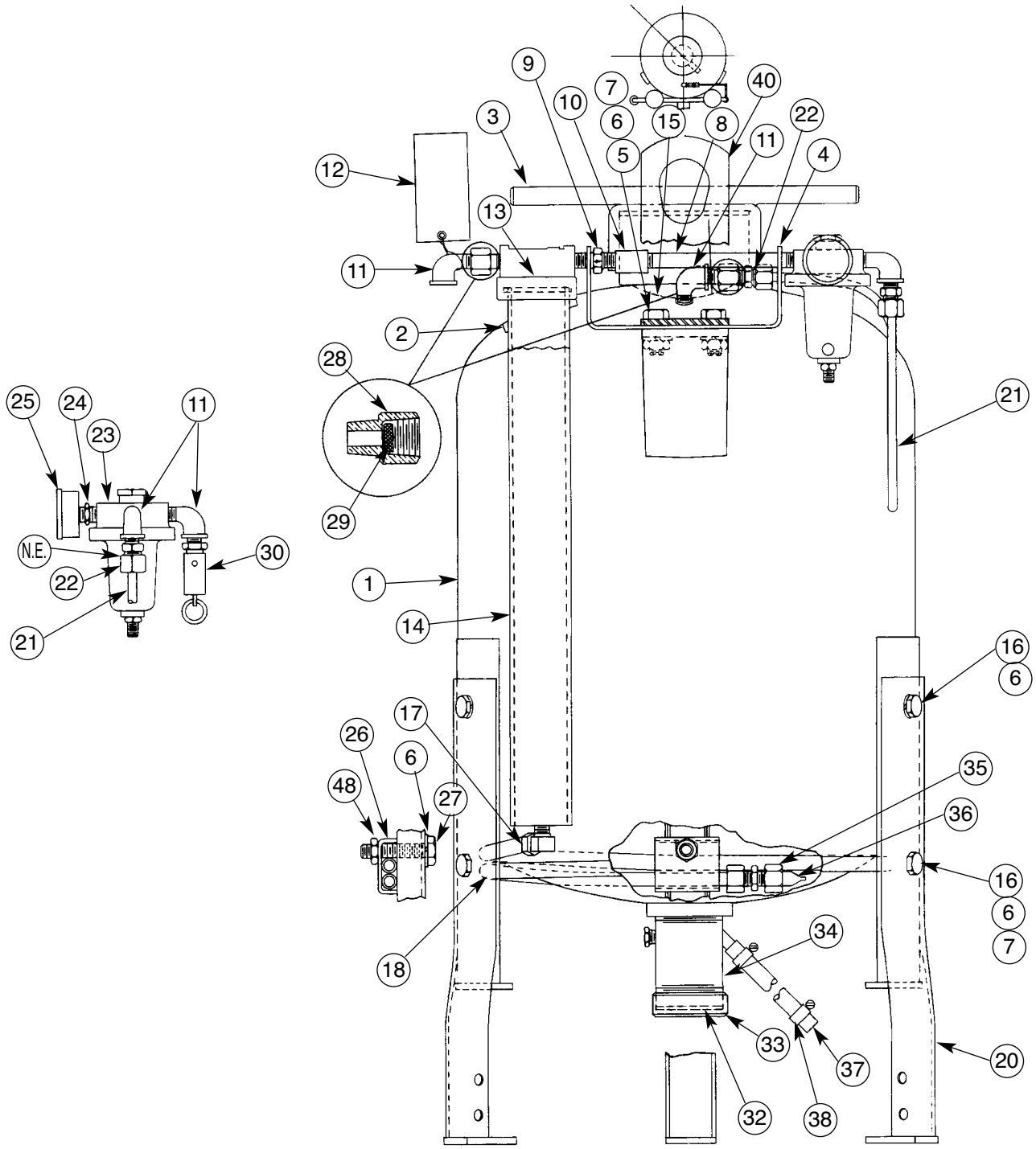

L4695-4
9-19-80J

# Indicates a Change This Printing

Use Column 1 for Flux Tanks with Safety Valve on Outlet Assembly.
Use Column 2 for Flux Tanks with Safety Valve on Pressure Regulator.
Use Column 3 for Flux Tanks used on Welding Station.

t ITEM	DESCRIPTION	PART NO.	QTY.	1	2	# 3	4	5	6	7	8	9	
	Flux Tank Assembly, Includes:	K320	1	X	•	•							
	Flux Tank Assembly, Includes:	L4695-4	1	•	X	•							
	Flux Tank Assembly, Includes:	L4695-2	1	•	•	X							
1	Flux Tank	G1204	1	X	•	•							
1	Flux Tank	G1204-1	1	•	X	X							
2	Decal	T11182	1	X	X	X							
3	Tank Cover	S11461	1	X	X	X							
4	Instrument Mounting Bracket	S12741	1	X	X	X							
5	Hex Head Screw	1/2-13 x 1.25	2	X	X	X							
6	Lock Washer	E106A-5	8	X	X	X							
7	Hex Nut	1/2-13	4 or 5	X	X	X							
8	Pipe Nipple	T9959-11	1	X	X	X							
9	Check Valve	T11130	1	X	•	•							
9	Check Valve	T14410	1	•	X	X							
10	Pipe Nipple	T9959-7	1	X	•	•							
10	Pipe Coupling	T12390-1	1	•	X	X							
11	Street Elbow	T9958-2	4	X	X	X							
12	Caution Tag	T11416	1	X	X	X							
13	Air Line Filter	S11060	1	X	X	X							
14	Water Separator	M8985-1 ø	1	X	X	X							#
15	Strainer	S16628-1	1	X	X	X							
16	Hex Head Screw	1/2-13 x .75	5	X	X	X							
17	Compression Elbow	S7531	1	X	X	X							
18	Bleeder Line (For LN-4 or LN-5, Also Order Items 35 & 36)	T12995	1	X	X	X							
20	Flux Tank support	S12737	3	X	X	X							
21	Copper Line (For LN-4 or LN-5, Order S4893-65) ø	S4893-61	1	X	•	•							#
21	Copper Line	S4893-66	1	•	X	X							
22	Male Connector	T11167	2	X	X	X							
23	Pressure Regulator	S11028	1	X	X	X							
24	Reducing Bushing	T9948	1	X	X	X							
25	Pressure Gauge	S11395	1	X	X	X							
26	Clamp	S12740	1	X	X	X							
27	Hex Head Screw	1/2-13 x 2.75	1	X	X	X							
28	Adaptor	T11248	2	X	X	X							
29	Screen Cup	T11249	2	X	X	X							
30	Safety Valve	T11394	1	X	X	X							
31	Street Tee	T11393	1	X	•	•							
32	Cap Gasket	T11225-1	1	X	X	X							
33	Outlet Tube Cap	S11155	1	X	X	X							
34	Outlet Assembly	S12739	1	X	X	X							
35	Union	T12754	1	X	X	X							
36	Flared Copper Tube	T12755	1	X	X	X							
37	Flux Hose	T10642-81	1	X	•	•							#
37	Flux Hose (8 Ft. Boom)	T10642-80 ø	1	•	•	X							
37	Flux Hose (11Ft. Boom)	T10642-79	1	•	•	X							
37	Flux Hose (14 Ft. Boom)	T10642-77	1	•	•	X							
38	Hose Clamp (Tank End)	S10888-27	2	X	X	X							
40	Lift Bail Assembly	M11483	1	X	X	•							
	Flux Funnel - Not Illustrated	S11062	1	X	X	X							
	Air Line Connector - Not Illustrated	T14390-2	1	•	•	X							

Ø This part is obsolete and no longer available.

UNDERCARRIAGE: K163

Standard with LN-6S, LN-6SE, LN-8S, LN-8SE, LN-9S and LN-9SE

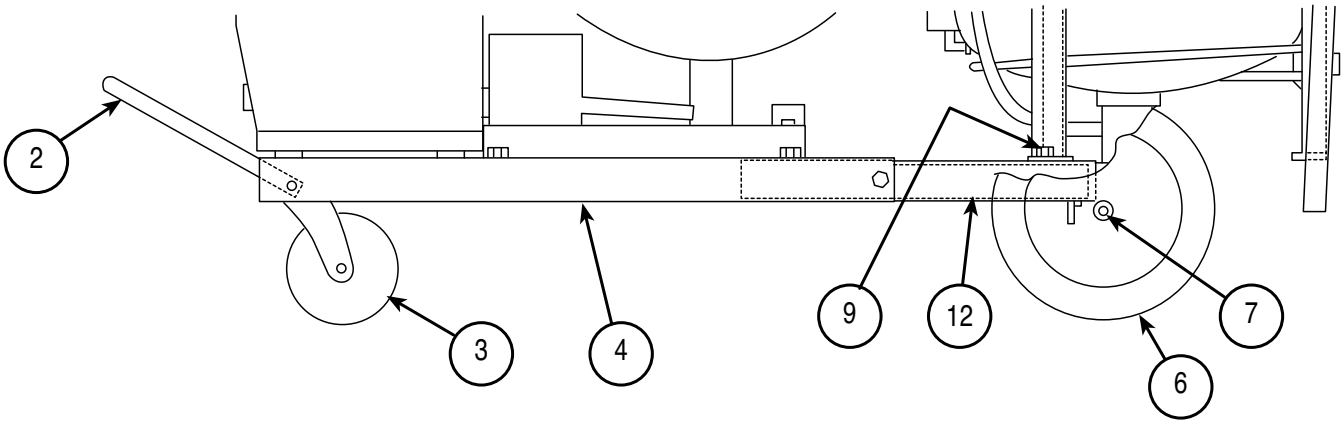

For optional K163 use parts marked “X” in Column 1.
For LN-6S, 6SE, 8S, 8SE, 9S, and parts marked “X” in Column 2.

# Indicates a Change This Printing

ITEM	DESCRIPTION	PART NO.	QTY.	1	2	3	4	5	6	7	8	9	
	Undercarriage, Includes:	K163	1	X	•								
	Undercarriage, Includes:	(Standard Equip.)	1	•	X								
2	Handle	M10469-1	1	X	X								#
3	Casters	S11124	2	X	X								
4	Base, Platform Type (Discontinued)	L4688	1	X	X								
4	Base, Open Frame Type	L5239	1	X	X								
6	Wheels	S13127	2	X	X								
7	Axle	M10470	1	X	X								
12	Flux Tank Support	S12737	3	•	X								

NOTES

P-107-V.a

MECHANIZED TRAVEL POWER PACK: K161

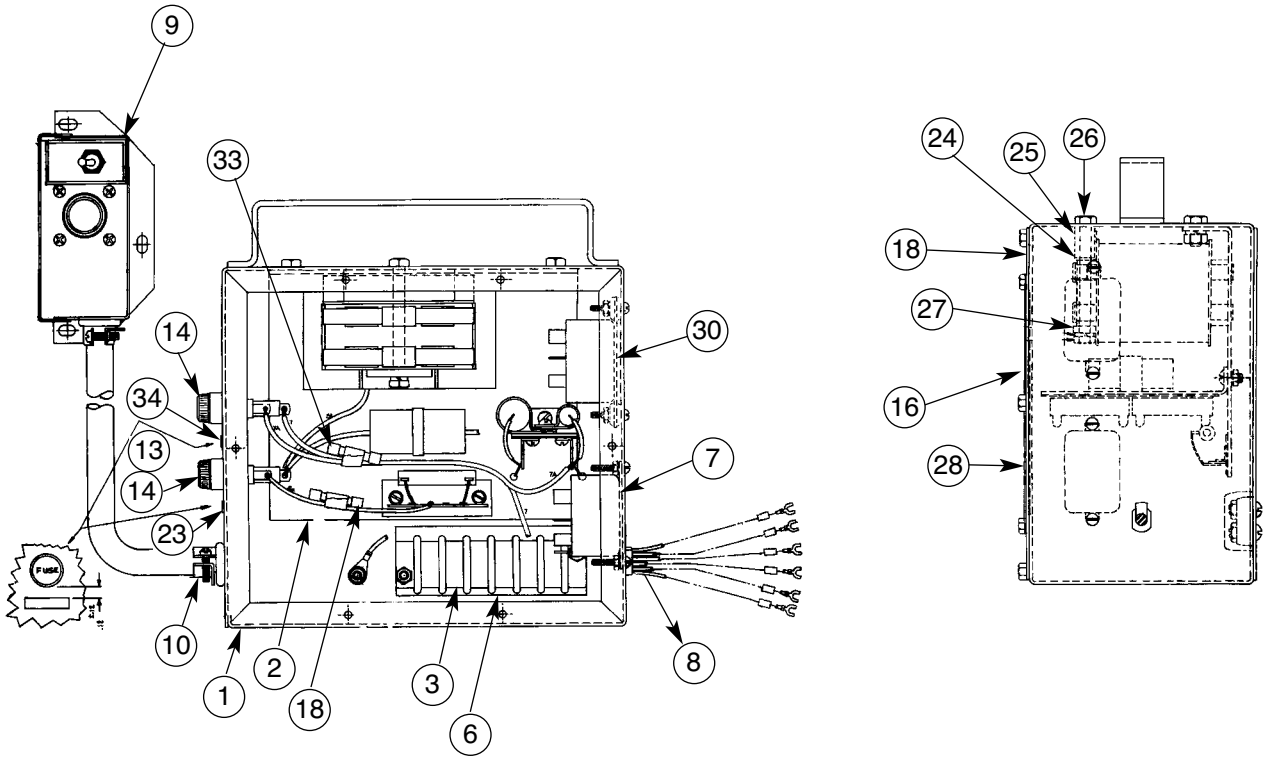

G1429
10-23-81N

# Indicates a Change This Printing
#

Use Parts Marked “X” in Column 1 for Code 6801.
Use Parts Marked “X” in Column 2 for Code 7627.

ITEM	DESCRIPTION	PART NO.	QTY.	1	2	3	4	5	6	7	8	9
	Mechanized Travel Power Pack, Includes:	K161*	1	X	X							
1	Case Welded Assembly	M9734	1	X	X							
2	Mag-Amp Assembly, Includes:	L3524-1	1	X	X							
	Core and Coil Assembly	M9017	1	X	X							
	Resistor	S10404-15	1	X	X							
	Insulation	T11134-1	1	X	X							
	Terminal Strip	T10707	1	X	X							
	Condenser	T11577-37	1	X	X							
	Rectifier Assembly	S13707	1	X	X							
5	Terminal Strip	S8542	1	X	X							
6	Number Plate	T10726-60	1	X	X							
7	Relay	S22182	1	X	X							
8	Lead Grommet	T9274-1	1	X	•							
8	Lead Grommet	T9274-2	1	•	X							
9	Adapter Box Assembly, Includes:	M11617*	1	X	X							
	Amphenol Connector (Next to Toggle Switch)	S12021-3	1	X	X							
	Toggle Switch	T13083	1	X	X							
	Amphenol Connector (Opposite Side of Box from Switch)	S12020-6	1	X	X							
10	Connector	T9639-2	1	X	X							
13	Fuse (1/8 Amp)	T10728-9	2	X	X							
14	Fuse Holder	S10433	2	X	X							
16	Nameplate	M9730	1	X	X							
18	Front Panel	S11344	1	X	X							
23	Fuse Identification Sticker	T12607-9	1	X	X							
24	Insulation	T11472-5	1	X	X							
25	Spacer	S10040-33	1	X	X							
26	Hex Head Screw	1/4-20x3.00	1	X	X							
27	Spacer	S10040-34	1	X	X							
28	Wiring Diagram	S13868	1	X	•							
28	Wiring Diagram	M20116	1	•	X							
30	Relay	S15122-10	1	•	X							
33	Fuse	T10728-10	2	X	X							
34	Fuse Identification Sticker	T12607-10	1	X	X							

* Specify Cable Length

POWER PACK/CONTACTOR KIT: K124 and K130

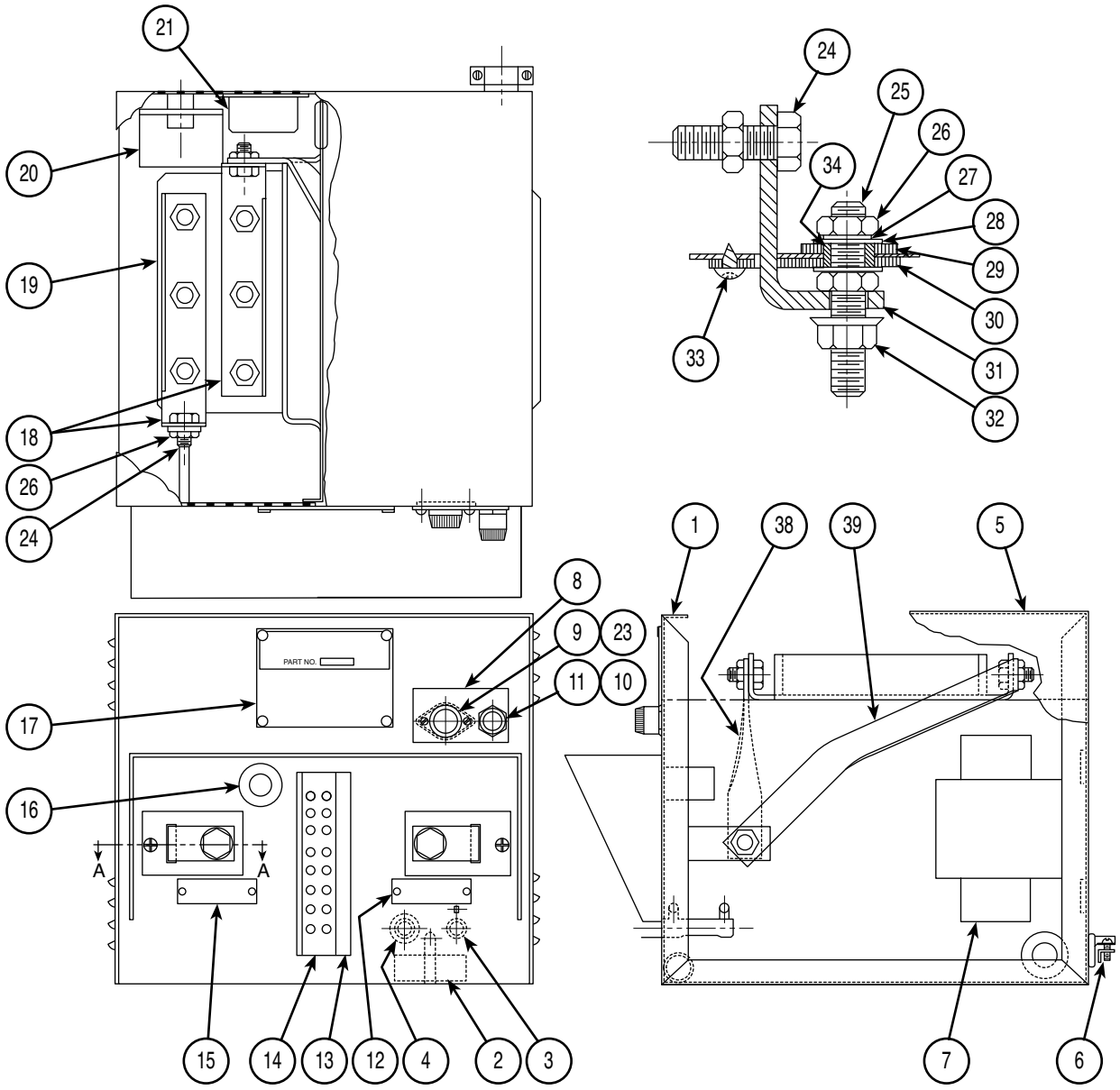

# Indicates a Change This Printing

For Assembly L4276* use the parts marked “X” in Column 1.
For Assembly L4383* use the parts marked “X” in Column 2.
For Assembly L4383-A* use the parts marked “X” in Column 3.

ITEM	DESCRIPTION	PART NO.	QTY.	1	2	3	4	5	6	7	8	9
1	Case, For Assemblies L4276	M10634	1	X	•	•						
1	Case, For Assemblies L4383 or L4383-A	M10634-1	1	•	X	X						
2	Capacitor	T11577-37	1	X	X	X						
3	Resistor	See Below	1	X	X	X						
4	Rectifier	T13637	1	X	X	X						
5	Cover	L3153	1	X	X	X						
6	Box Connector	T9639-2	1	X	X	X						
7	Transformer	See Below	1	X	X	X						
8	Fuse Nameplate	T12401 ø	1	X	•	•						
8	Fuse Nameplate	T12593 ø	1	•	X	X						
9	Circuit Breaker	T12287-1	1	X	•	•						
9	Fuse Holder	T12386	1	•	X	X						
10	Fuse	T10728-20	1	X	X	X						
11	Fuse Holder	S10433	1	X	X	X						
12	“Power Source” Marker	T10743	1	X	X	X						
13	Number Plate	T10726-30 ø	1	X	X	X						
14	Terminal Strip	S8542-2 ø	1	X	X	X						
15	Auto Equipment Marker	T12256	1	X	X	X						
16	Grommet	T8965	2	X	X	X						
17	Nameplate	M10643	1	X	X	X						
18	Copper Jumper and Heat Radiator Assembly	S13472-2	2	X	X	X						
19	Contactor (S45)	Order S67 (L4300-4)	1	X	X	•						
	L2630-S1 S45 Contactor Parts	See P-28-E										
19	Contactor (S67)	L4300-4	1	•	•	X						
	S67 Contactor Parts	See P-28-H										
	NVR Coil	See Below	1	X	X	X						
20	Relays and Mounting Panel, Includes:	S10831-1 ø	1	X	X	X						
	Pilot Relay	S10957 ø	1	X	X	X						
	Full Field Relay	S10834-1	1	X	X	X						
21	Capacitor	T11079	1	X	X	X						
23	Fuse	T10728-17	1	•	X	X						
24	Hex Head Screw	1/2-13 x .75	2	X	X	X						
25	Stud	T6931-3	2	X	X	X						
26	Hex Jam Nut	1/2-13	8	X	X	X						
27	Lock Washer	E106A-5	2	X	X	X						
28	Flat Washer	S9262-1	4	X	X	X						
29	Insulating Washer	S10773-9	2	X	X	X						
30	Insulating Panel	T14373	2	X	X	X						
31	Connecting Strap	T8141	2	X	X	X						
32	Flanged Nut	T3960	2	X	X	X						
33	Self Tapping Screw	S8025-65	2	X	X	X						
34	Insulating Tube	T14374	2	X	X	X						
38	“Auto Equipment” Lead	S13469	1	X	X	X						
39	“Power Source” Lead	S13470	1	X	X	X						

Assembly No.*	Machine Voltage	Hertz	Item 3	Item 7	Item 19 NVR Coil
L4276-1	220/440	60	S10404-60 ø	S13000-1 ø	S2-7
L4276-2	220/440	60	S10404-61	S13000-2	S2-7
L4276-3	550	60	S10404-61	S13000-3	S4-3
L4276-4	415	50	S10404-61	S13000-4	S15-3
L4276-5	380	50	S10404-61	S13000-5	S13A-2 ø
L4276-6	220/440	50	S10404-61	S13000-2	S2A-4 ø
L4383-1 or 1A	230/460	60	S10404-61	S13000-2	S2-7
L4383-2 or 2A	575	60	S10404-61	S13000-3	S4-3
L4383-3 or 3A	415	50	S10404-61	S13000-4	S15-3
L4383-4 or 4A	380	50	S10404-61	S13000-5	S13A-2 ø
L4383-5 or 5A	220/440	50	S10404-61	S13000-2	S2A-4 ø
L4383-6 or 6A	550	50	S10404-61	S13000-3	S4A-3

#

* Stamped on Power Pack/Contactor Kit Nameplate.

01-28-2003

ø This part is obsolete and no longer available.

P-107-W.2.a

CONTACTOR KIT: K240

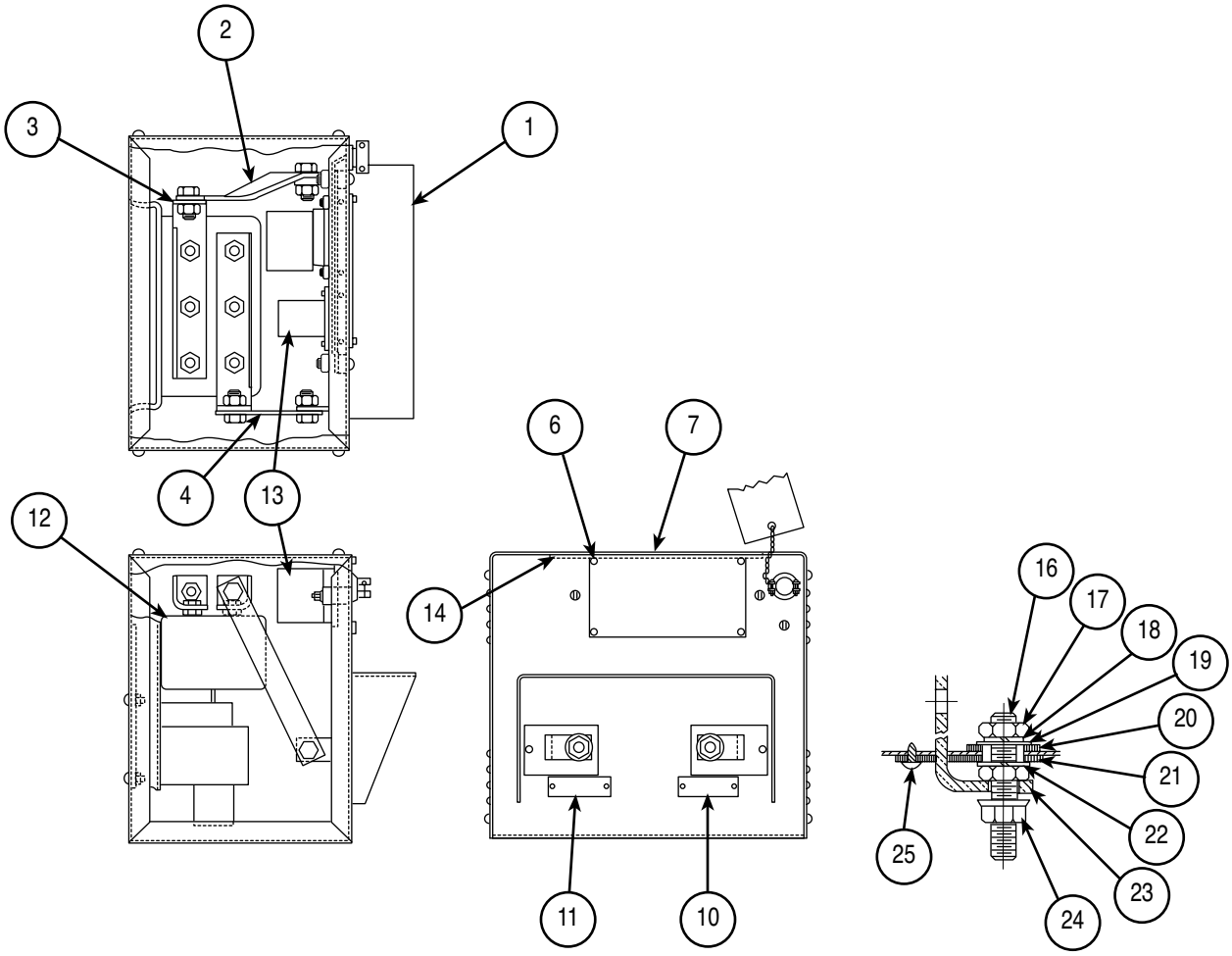

L5360
6-20-86S

# Indicates a Change This Printing

ITEM	DESCRIPTION	PART NO.	QTY.	1	2	3	4	5	6	7	8	9	
1	Case	M12799	1										
2	“Power Source” Lead	S15017-12	1										
3	Contactor Jumper	S13472-3	2										
4	“Auto Equipment” Lead	S15017-11	1										
5	Warning Decal	T13470	1										
6	Wraparound	L4397-1 ø	1										#
7	Nameplate	M12802	1										
10	“Power Source” Marker	T10743	1										
10	Rivet	T8973	2										
11	“Auto Equipment” Marker	T12256	1										
11	Rivet	T8973	2										
12	S67 Contactor (Early Machines)	L4300-35	1										
	L4300-35 Contactor Parts	See P-28-H											
12	S78	L6200-4	1										
	L6200-4 Contactor Parts	See P-28-J											
13	Relay	S10834-1	1										
13	Rubber Chassis Mount	T10325-1	4										
14	Printed Wiring Diagram	S15371	1										
16	Stud	T6931-11	2										
17	Hex Jam Nut	1/2-13	4										
18	Lock Washer	E106A-5	2										
19	Flat Washer	S9262-1	4										
20	Insulating Washer	S10773-9	2										
21	Insulating Panel	T14373	2										
22	Insulating Tube	T14374	2										
23	Connecting Strap	T8141	2										
24	Flange Nut	T3960	2										
25	Self Tapping Screw	S8025-65	2										

Ø This part is obsolete and no longer available.

S67 STARTER

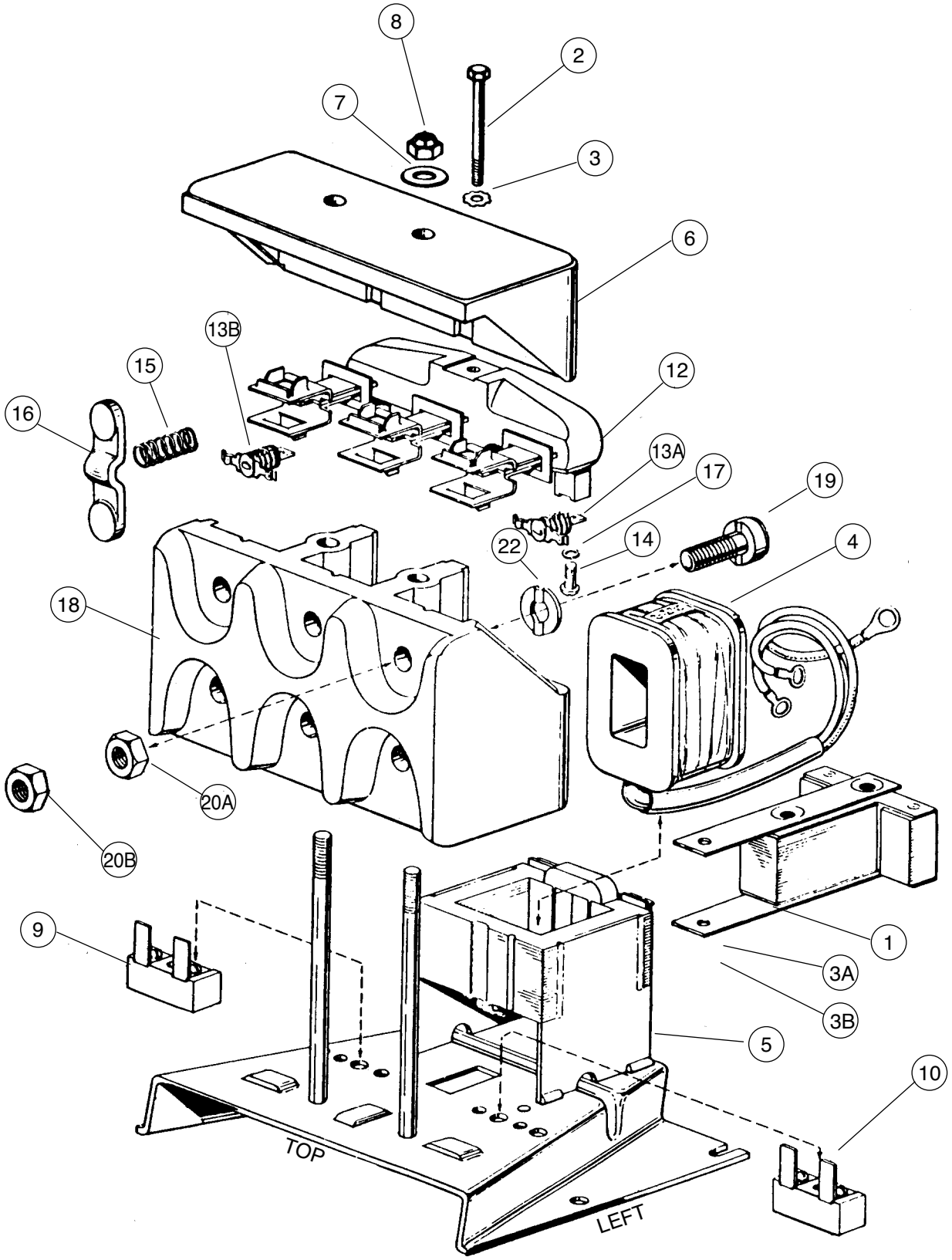
8
2
7
3
6
13B
15
12
16
13A
17
19
22
14
4
18
20A
20B
9
1
3A
3B
5
10
TOP
LEFT

TABLE

Use only the parts marked "X" in the column under the heading number called for in the model index page.

ITEM	DESCRIPTION	PART NO.	QTY.	A	B	C	D	E	F	G	H	J	K	L	M	N	P	Q
												#	#	#	#	#	#	#
	S67 Starter Assembly, Includes: (Less NVR Coil)	See Table A	1	X	X	X	X	X	X	X	X	X	X	X	X	X	X	X
1	Moving Lamination Assembly	S12851	1	X	X	X	X	X	X	X	X	X	X	X	X	X	X	X
2	Screw - Lamination Mounting	T9031	1	X	X	X	X	X	X	X	X	X	X	X	X	X	X	X
3	Lockwasher	T9695-1	1	X	X	X	X	X	X	X	X	X	X	X	X	X	X	X
3A	#10 Lockwasher	E106A-1	1	X	X	X	X	X	X	X	X	X	X	X	X	X	X	X
3B	#10 Hex Nut	CF000011	1	X	X	X	X	X	X	X	X	X	X	X	X	X	X	X
4	NVR Coil (Not Included in L4300 Assembly)	See Winding Specs	1	X	X	X	X	X	X	X	X	X	X	X	X	X	X	X
5	Lamination & Panel Assembly (40 Hertz & Over)	M6888-9	1	X	X	X	•	•	•	X	•	X	X	X	X	X	•	X
5	Lamination & Panel Assembly (Under 40 Hertz)	M6888-10 ø	1	X	X	X	•	•	•	X	•	X	X	X	X	X	•	X
5	Lamination & Panel Assembly	M6888-12 ø	1	•	•	•	X	X	X	•	X	•	•	•	•	•	X	•
	Plastic Insert	S10425	1	X	X	X	X	X	X	X	X	X	X	X	X	X	X	X
6	Contact Block Cover	M10667	1	X	X	X	X	X	X	X	X	X	X	X	X	X	X	X
7	Plain Washer	S9262-121	2	X	X	X	X	X	X	X	X	X	X	X	X	X	X	X
8	Hug Nut	T9187	2	X	X	X	X	X	X	X	X	X	X	X	X	X	X	X
9	Stationary Interlock Contact Assembly	See Table A	1	X	X	X	X	X	X	X	X	X	X	X	X	X	X	X
10	Stationary Interlock Contact Assembly	See Table A	1	X	X	X	X	X	X	X	X	X	X	X	X	X	X	X
	Moving Contact Assembly, Includes:	See Table A	1	X	X	X	X	X	X	X	X	X	X	X	X	X	X	X
12	Moving Contactor Block (3 pole)	M6892-D	1	X	X	•	•	•	X	•	X	X	X	X	•	X	•	X
12	Moving Contactor Block (2 pole)	M6892-E	1	•	•	X	X	X	•	X	•	•	•	•	X	•	X	•
13A	Moving Interlock Contact Assembly	See Table A	1	X	X	X	X	X	X	X	X	X	X	X	X	X	X	X
13B	Moving Interlock Contact Assembly	See Table A	1	X	X	X	X	X	X	X	X	X	X	X	X	X	X	X
14	Round Head Screw	#6-32 x .50	As Req'd	X	•	X	X	X	X	X	X	X	X	X	•	•	X	•
15	Spring - Main Contact	T9029	As Req'd	X	X	X	X	X	X	X	X	X	X	X	X	X	X	X
16	Moving Contact	T9865-4	As Req'd	X	X	X	X	X	X	X	X	X	X	X	X	X	X	•
16	Moving Contact	T9865-2R	As Req'd	•	•	•	•	•	•	•	•	•	•	X	•	•	•	X
17	Lockwasher	E106A-13	As Req'd	X	•	X	X	X	X	X	X	X	X	X	•	•	X	•
	Main Contact Block Assembly, Includes:	See Table A	1	X	X	X	X	X	X	X	X	X	X	X	X	X	X	X
18	Main Contact Block	L4305	1	X	•	•	X	X	X	X	X	X	•	•	•	X	•	•
18	Main Contact Block	M10681	1	•	X	X	•	•	•	•	•	•	X	X	X	•	X	X
19	Main Stationary Contact	S8029-1R	As Req'd	X	X	X	X	X	X	X	X	X	X	•	X	X	X	•
19	Main Stationary Contact	S8029-3	As Req'd	•	•	•	•	•	•	•	•	•	•	X	•	•	•	X
20A	Hex Jam Nut - Brass	T10940-3	As Req'd	X	X	X	X	X	X	X	X	X	X	X	X	X	X	X
20B	Hex Jam Nut - Steel	T10940-4	As Req'd	•	X	X	X	X	X	•	•	X	X	X	X	X	X	X
22	Spacer Washer	T12595 ø	As Req'd	X	X	X	X	X	X	X	X	X	X	X	X	X	X	X

Ø This part is obsolete and no longer available.

MECHANIZED HAND TRAVEL UNIT: K110

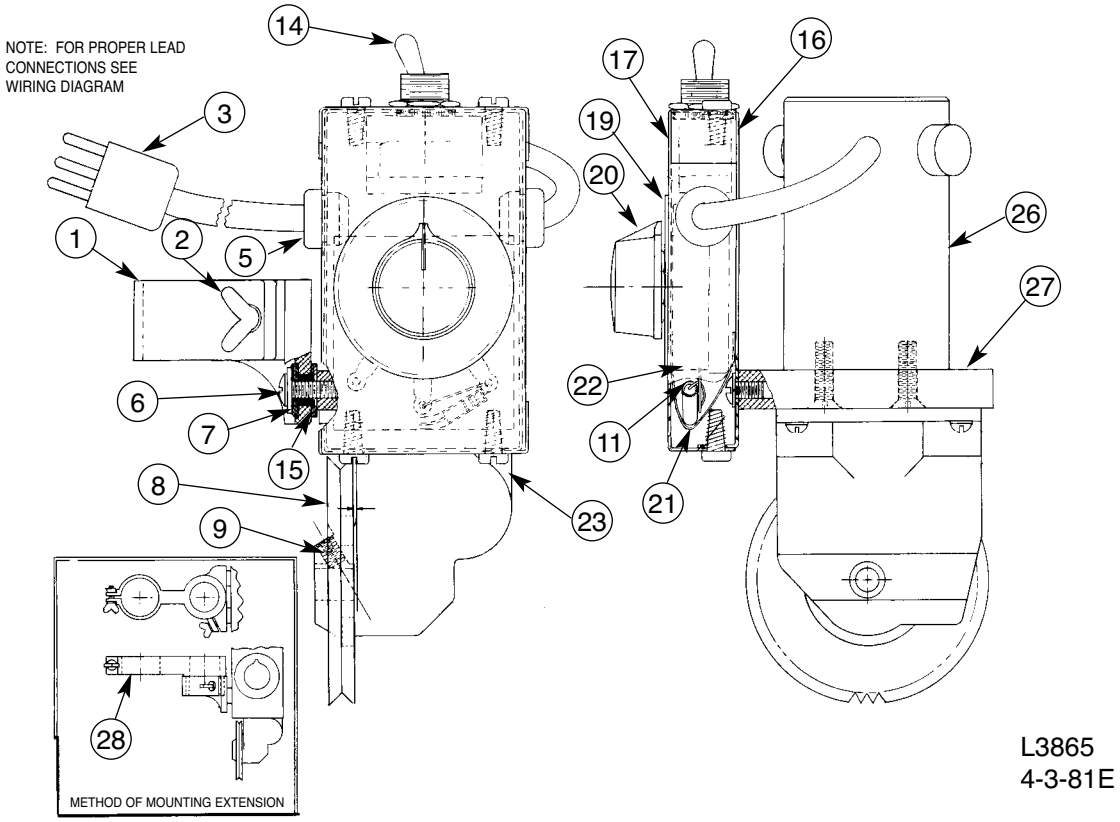

Use only the parts marked "X" in the column under the heading number called for in the model index page.

# Indicates a Change This Printing

ITEM	DESCRIPTION	PART NO.	QTY.	1	2	3	4	5	6	7	8	9
t												
	Gun Drive Unit Assembly, Includes:	K110	1									
1	Mounting Clamp	M9108	1									
2	Thumb Screw	T9078-3	1									
3	Control Cable and Plug	S11837	1									
5	Grommet	T9274-1	2									
6	Truss Head Screw	8-32x5/8	2									
7	Insulator Bushing	T11215-2	2									
8	Drive Wheel	M9122	1									
9	Hollow Set Screw, Cup Point	S11604-13	1									
11	Resistor	T12731-3	1									
14	Reversing Switch	T13111	1									
15	Insulating Plate	T11221	1									
16	Control Box Back	M9027-1	1									
17	Control Box Front	M9693	1									
19	Dial Plate	S11163	1									
20	Knob	T11157	1									
21	Insulation	T11228	1									
22	Rheostat	T10812-9	1									
23	Gear Box assembly	See P-107-Y	1									
26	Motor	S11162	1									
27	Adapter Plate	M9109	1									
28	Mounting Clamp Extension	M9142	1									

GEAR BOX FOR K110

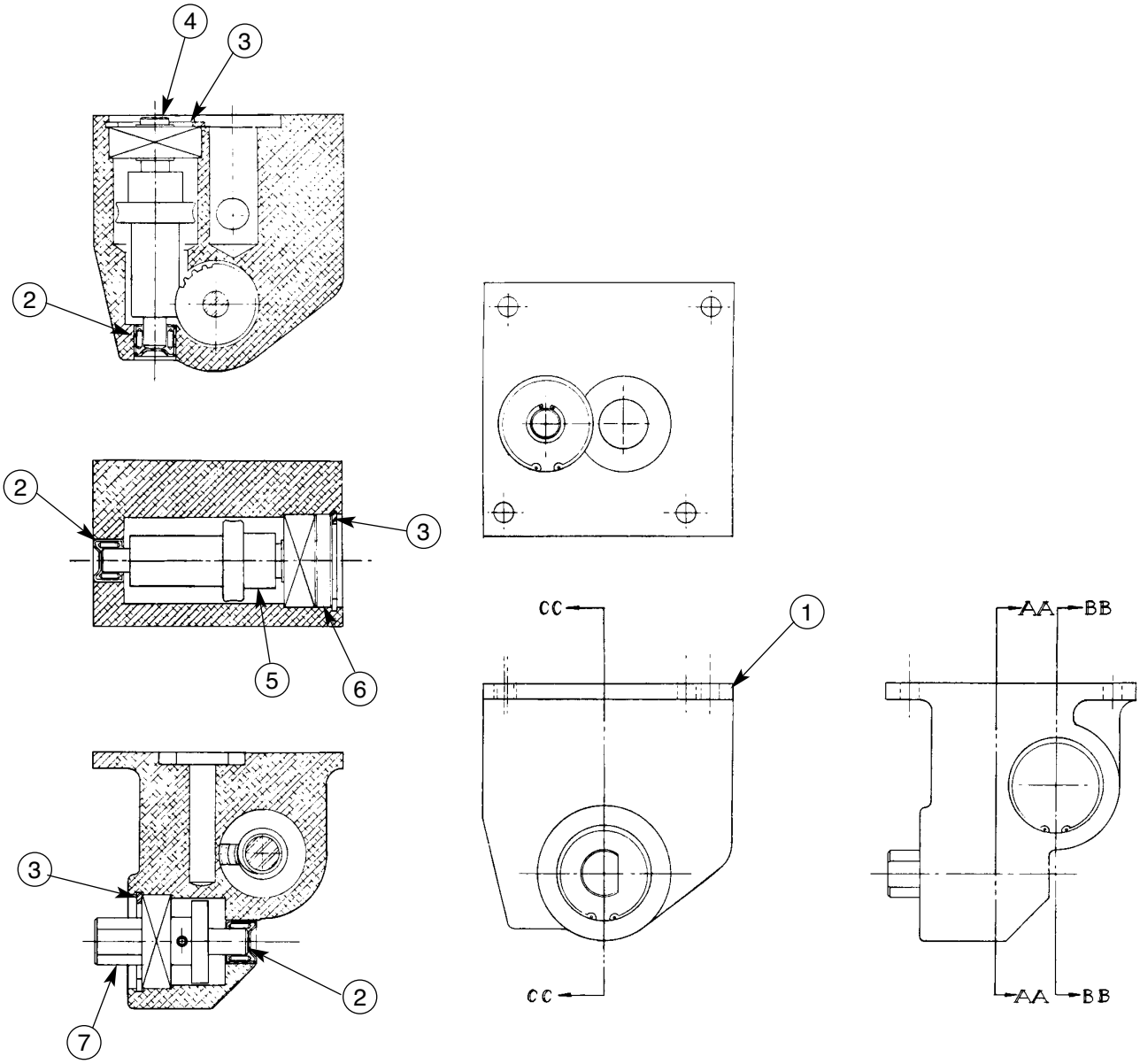

Use only the parts marked “X” in the column under the heading number called for in the model index page.

# Indicates a Change This Printing

ITEM	DESCRIPTION	PART NO.	QTY.	1	2	3	4	5	6	7	8	9
	Gun Drive Gear Case Assembly, Includes:	L3569	1									
1	Gear Box	L3568	1									
2	Needle Bearing	S10116-2	3									
3	Retaining Ring	S9776-9	3									
4	Vertical Shaft Assembly	S11160	1									
5	Cross Shaft Assembly	S11161	1									
6	Shaft Cap	T11226	1									
7	Output Shaft Assembly	S11159	1									

PORTABLE FIELD CONTROL: K200

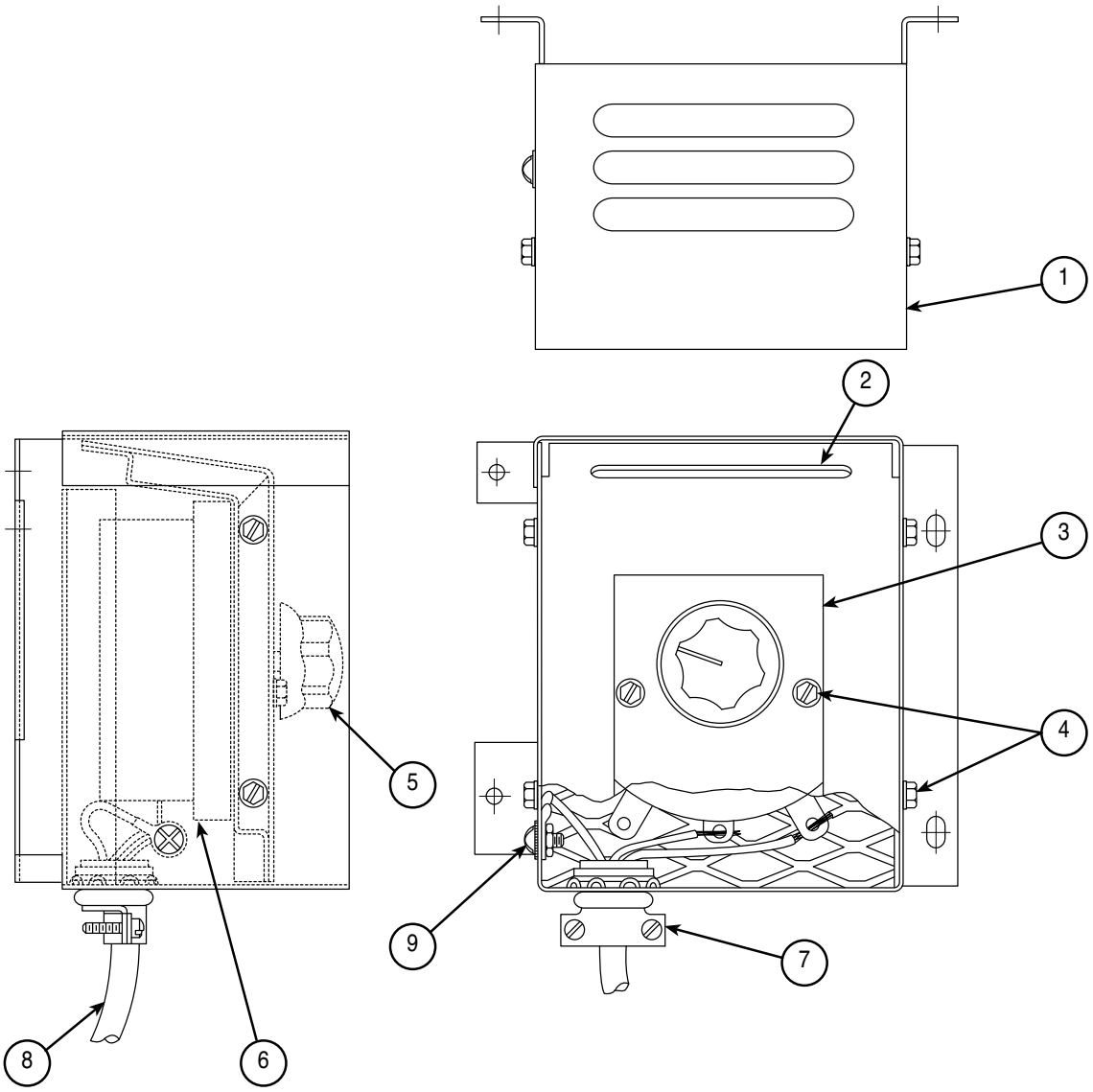

# Indicates a Change This Printing

ITEM	DESCRIPTION	PART NO.	QTY.	1	2	3	4	5	6	7	8	9	
	Complete Control Assembly, Includes:	K200	1										
1	Control Box Assembly	M12536 ø	1										#
2	Front Panel Assembly	M12498											
3	Nameplate	S14201	1										
4	Self-Tapping Screw	S8025-12	6										
5	Knob	T10491	1										
6	Rheostat	T10812-47	1										
7	Box Connector	T9639-2	1										
8	Control Cable	M12499	1										
9	Thread Cutting Screw	S9225-30	1										
	Lockwasher	T9695-1	1										
	Hex Nut	#10-24	1										

01-16-2003

Ø This part is obsolete and no longer available.

K261 WIRE FEED SPEED METER-ANALOG VOLTMETER KIT

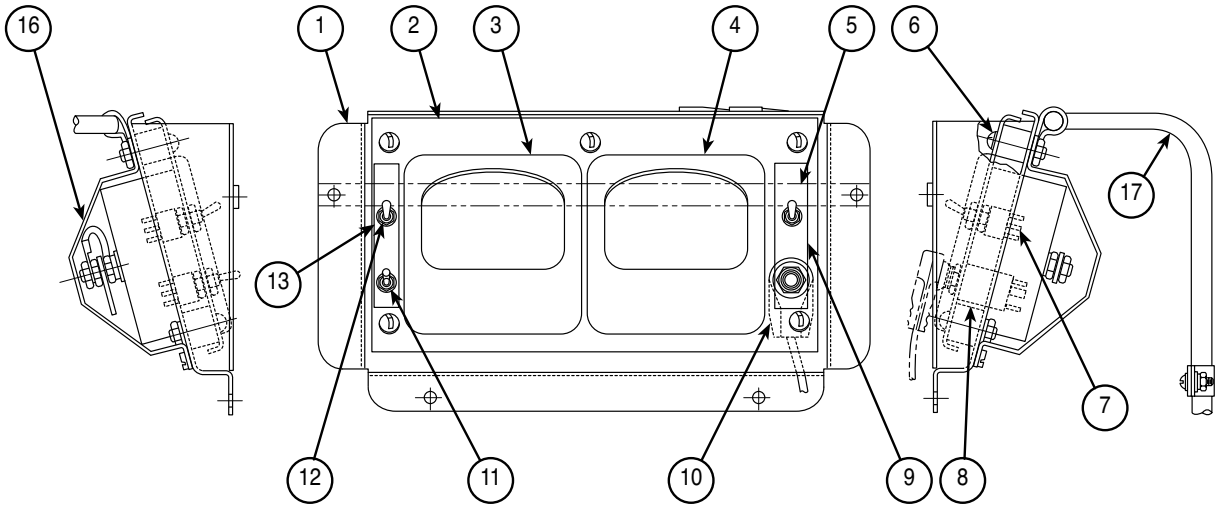

# Indicates a Change This Printing													
ITEM	**DESCRIPTION**	**PART NO.**	**QTY.**	**1**	**2**	**3**	**4**	**5**	**6**	**7**	**8**	**9**	
	Meter Kit, Includes:	K261	1										
	Meter Kit, Includes:	K262	1										
1	Meter Housing	L4753 ø	1										#
2	Meter Panel	M13036-1	1										
3	Feed Speed Ammeter	S15650	1										
4	Analog Voltmeter for K261	M10486-3	1										
4	Electronic Voltmeter for K262	M12995 ø	1										
5	Meter Guard	S10509-60	1										
6	Shock Mounting	T13003	4										
7	Polarity Switch	T13381-5	1										
8	Work Jack	T14280	1										
9	Switch Plate	T13096-3	1										
10	Remote Work Lead (Optional for K261)	S15636	1										
11	Momentary Switch	T10800-15	1										
12	Toggle Switch	T13381	1										
13	Switch Plate	T13096-4	1										
16	Meter Shield	M13044	1										
17	Harness	S14165-70											

K262 WIRE FEED SPEED METER-ELECTRONIC VOLTMETER KIT

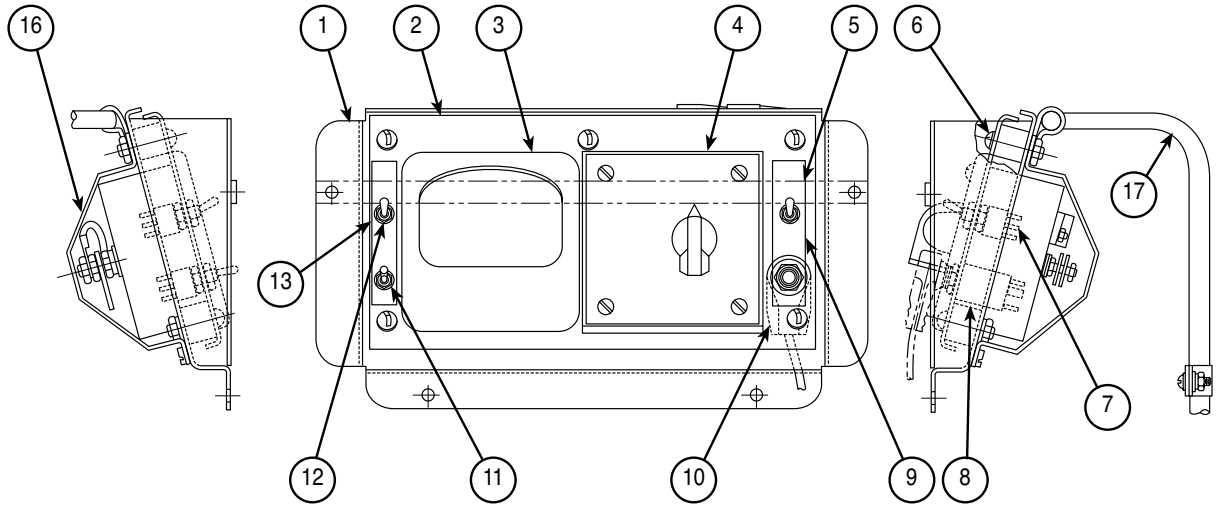

02-20-2002

Ø This part is obsolete and no longer available.

K224 SOLID-STATE REMOTE FIELD CONTROL (DISCONTINUED)

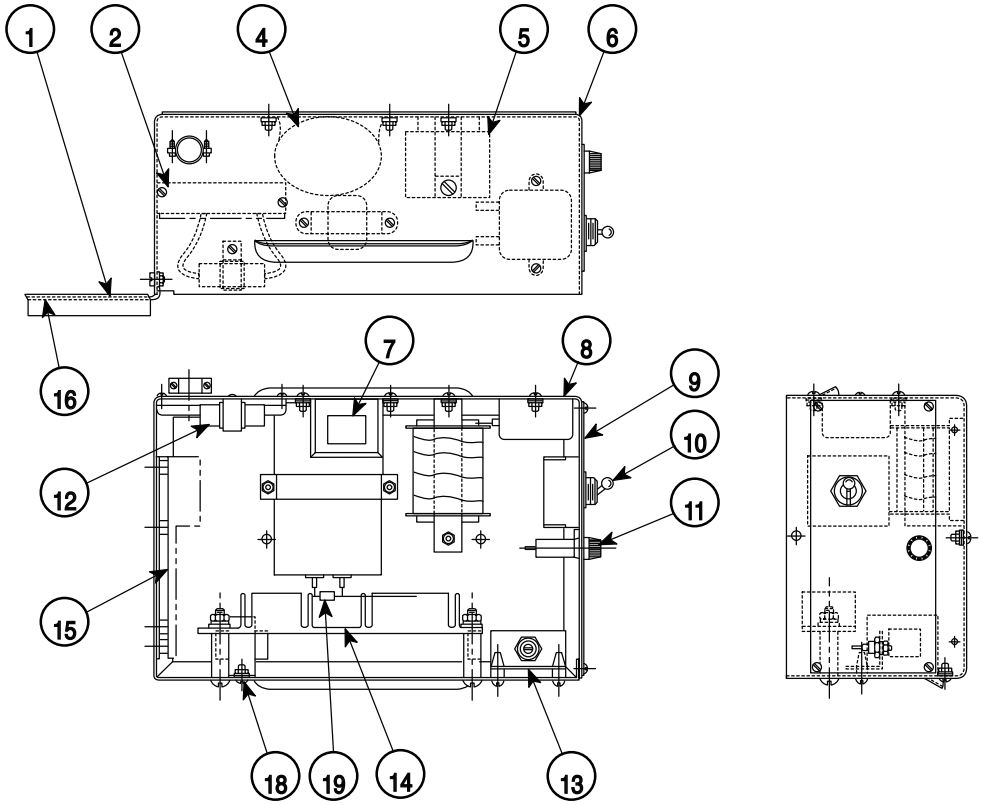

L5297
10-2-81Q

# Indicates a Change This Printing

ITEM	DESCRIPTION	PART NO.	QTY.	1	2	3	4	5	6	7	8	9
	Solid State Remote Field Control, Includes:	K224	1									
1	Top Door	M10639-4	1									
2	Terminal Strip	S14530-1	1									
	Number Plate	T10726-90	1									
4	Capacitor	S10593	1									
5	Auto Transformer	M12702 ø	1									
6	Box Assembly	M12706 ø	1									
7	Transformer	S15257 ø	1									
8	Capacitor	T11079	1									
9	Nameplate	M12688	1									
10	Polarity Switch	S13417 ø	1									
11	Fuse Holder	S10433	1									
	Fuse	T10728-8	1									
12	Capacitor	S13490-1	1									
13	Diode	T12705-15	1									
14	SCR and Heat Sink	M13342 ø	1									
15	Control P.C. Board (Code 7359 Only)	L5316-[ ]	1									
15	Control P.C. Board (Code 7683 & Above)	L5759-[ ]	1									
16	Caution Decal	T13470	1									
18	Choke	S14644	1									
19	Resistor (Code 7742 & Above)	T12731-42F	1									
	K224 Mounting Angles	S12995-1 & S13709	1 ea									

Ø This part is obsolete and no longer available.

06-13-2008

NOTES

LN-8F WIRE DRIVE UNIT DIMENSIONS

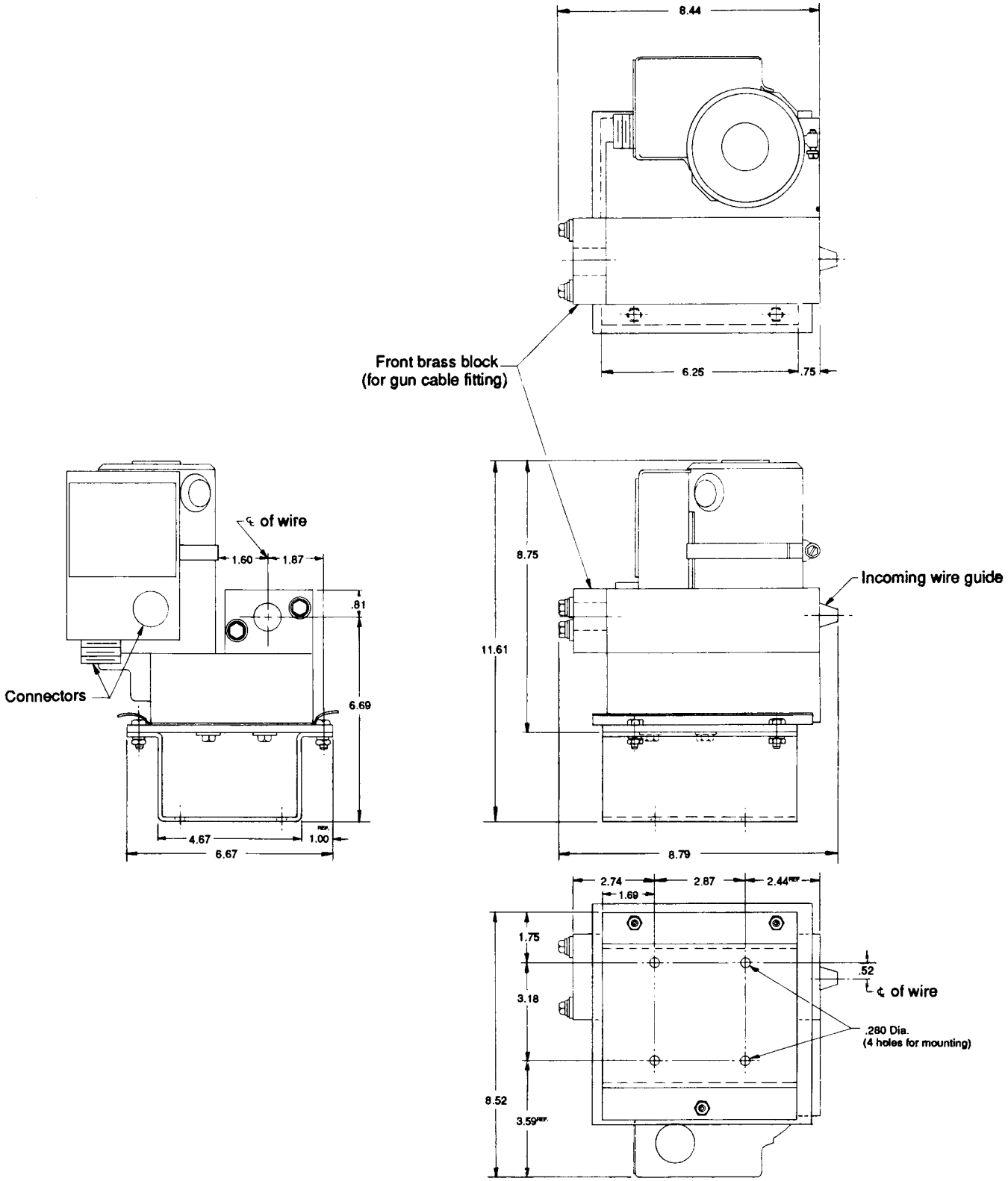

The Lincoln Electric Company
Cleveland, Ohio 44117-1199

GUN CABLE CONNECTION REQUIREMENTS

NOTE: These are general specifications for gun cable connections with the LN-8. Contact your local Lincoln Welding distributor listed under "welding" in the Yellow Pages for details.

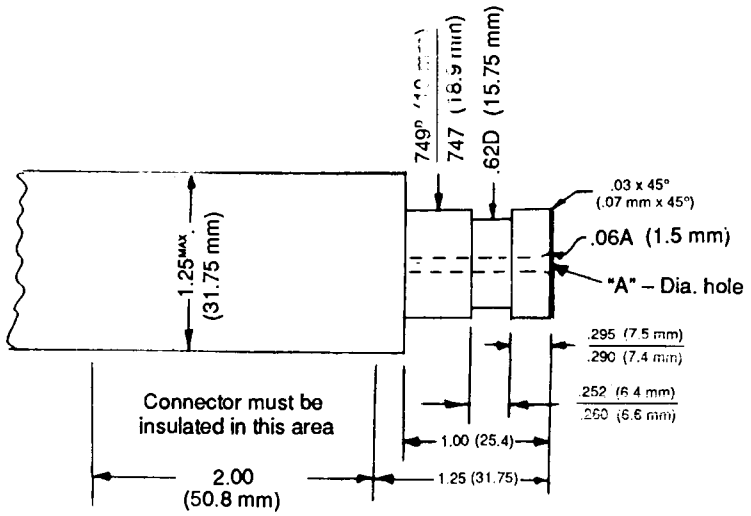

Gun cable connector requirements to permit proper connection to Lincoln wire feeders.
LN-8 & LN-9

Wire Size	"A" Dia. Hole To be Concentric to .749/.747 Dia. (19/18 mm) within .008 (.20 mm) F.I.M.
7/64 & .120 (2.8 & 3.0 mm)	.152 #24 drill) (3.86 mm)
.068 thru 3/32 (1.7 thru 2.4 mm)	.125 (1/8 drill) (3.18 mm)
1/16 (.062) (1.6 mm)	.078 (5/64 drill) (1.98 mm)
.045 & .052 (1.1 & 1.3 mm)	.062 (1/16 drill) (1.6 mm)
.030 & .035 (0.8 & 0.9 mm)	.055 (#54 drill) (1.4 mm)

LN-8 & LN-9 Cable connector for 1/16 through .120 (1.6 through 3.0 mm) wire.

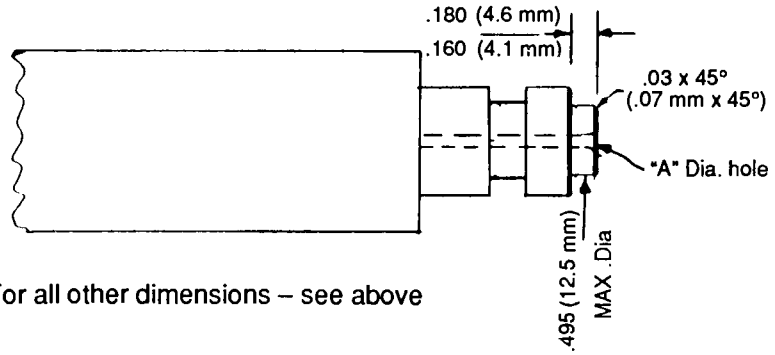

For all other dimensions – see above

Switch requirements
1/2 Amp. A.C. 24 volts – Inductive
1/2 Amp D.C. 24 volts – Inductive

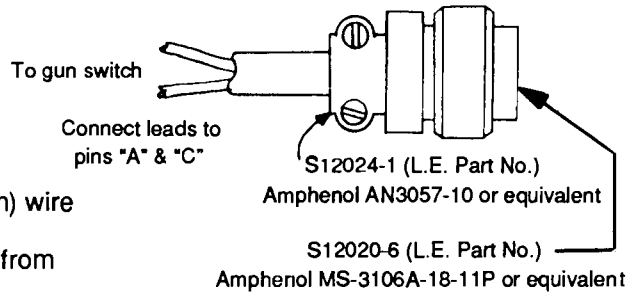

LN-8 & LN-9 Cable connector for .030 through .052 (0.8 through 1.3 mm) wire

NOTE: Connector part with .749/.747 (19/18 mm) Dia. should be made from brass if it is to be part of the welding current carrying circuit.

LN-8F WIRING DIAGRAM

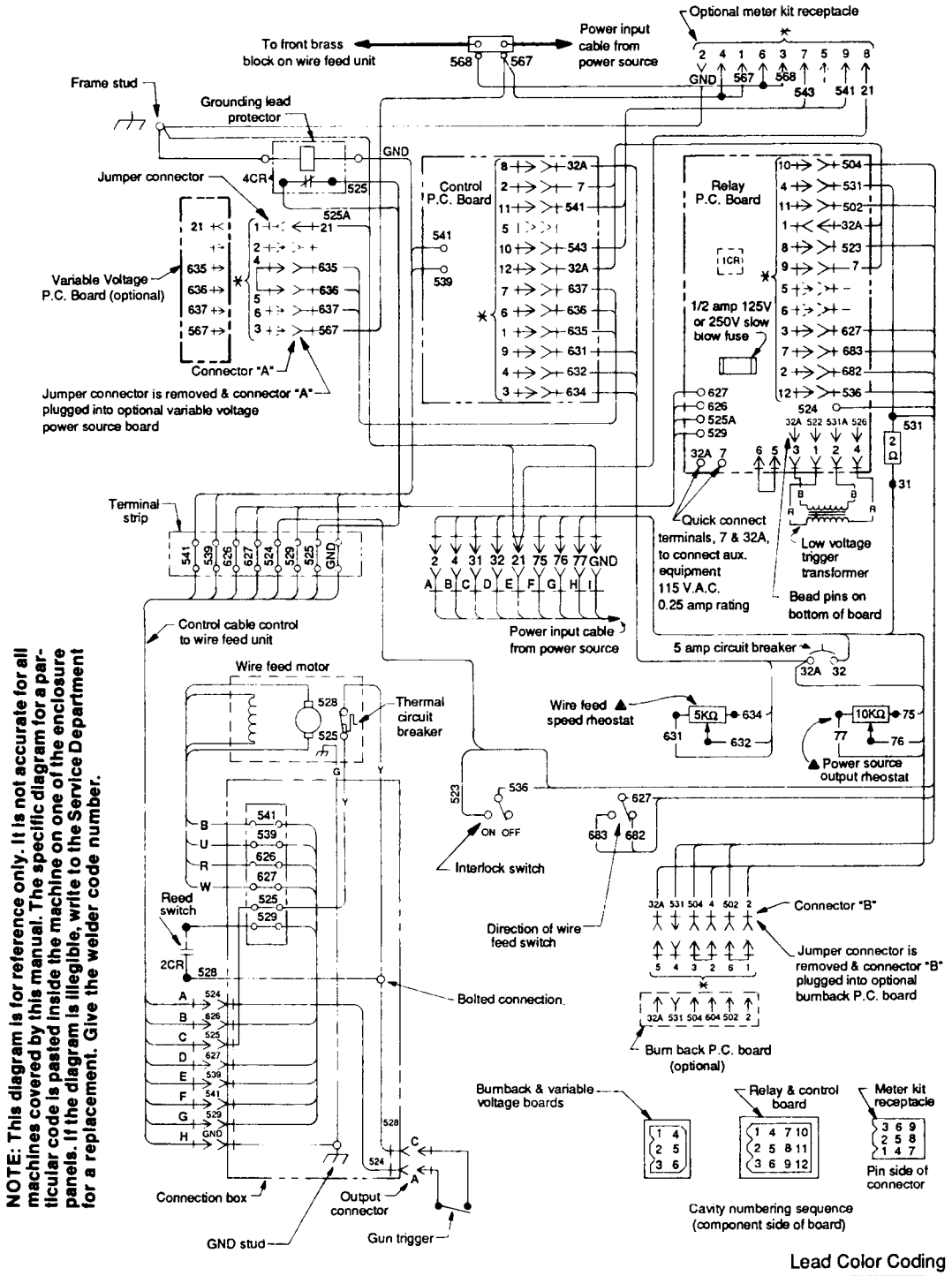

NOTE: This diagram is for reference only. It is not accurate for all machines covered by this manual. The specific diagram for a particular code is pasted inside the machine on one of the enclosure panels. If the diagram is illegible, write to the Service Department for a replacement. Give the welder code number.

Electrical symbols per E-1537

✱ Connector Cavity Number

▲ Connection as viewed from back of rheostat

Lead Color Coding

B = Black
G = Green
R = Red
W = White
U = Blue
Y = Yellow

The Lincoln Electric Company
Cleveland, Ohio 44117

LN-8F CONTROL BOX DIMENSIONS

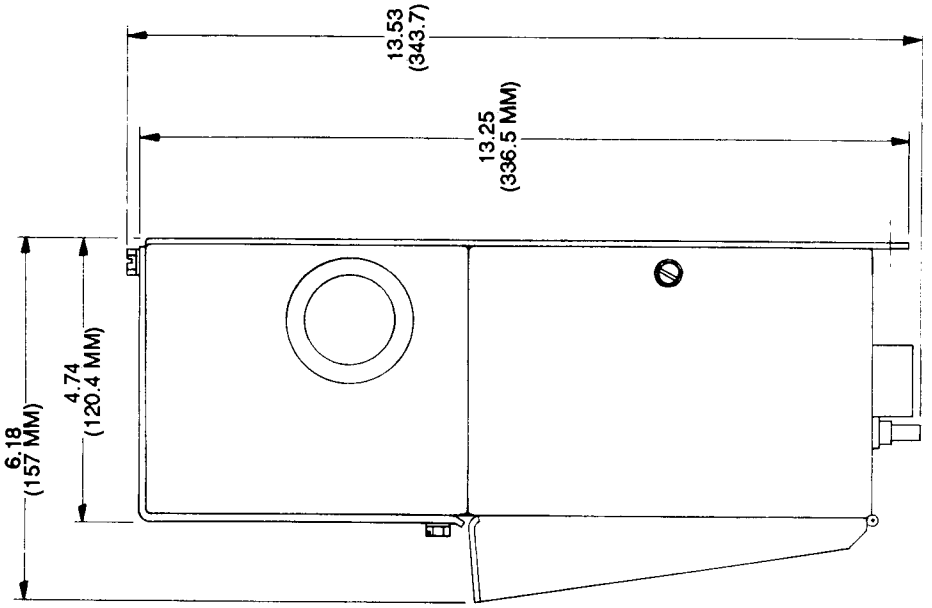

All dimensions in Inches and Millimeters

Date: 11-14-75

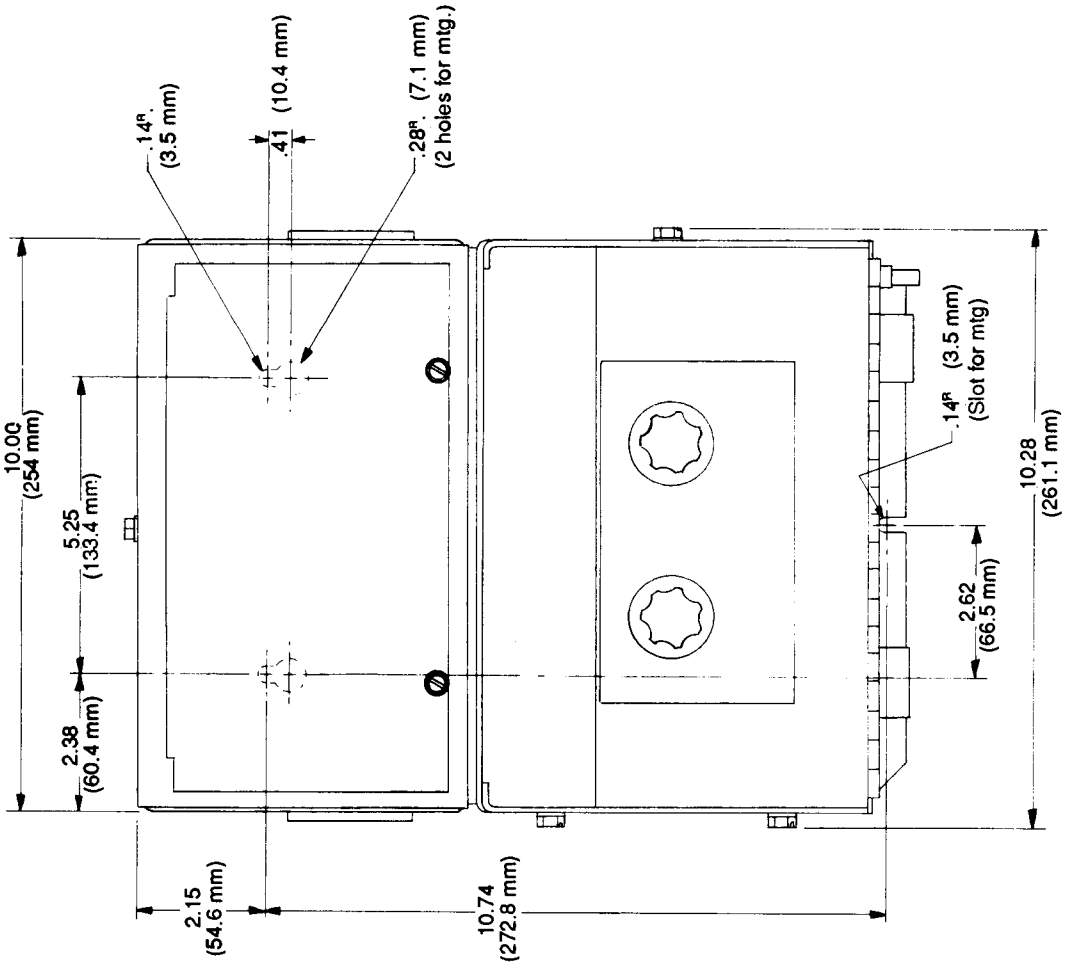

Drawing: M-13170

LN-8F
OPERATING SCHEMATIC

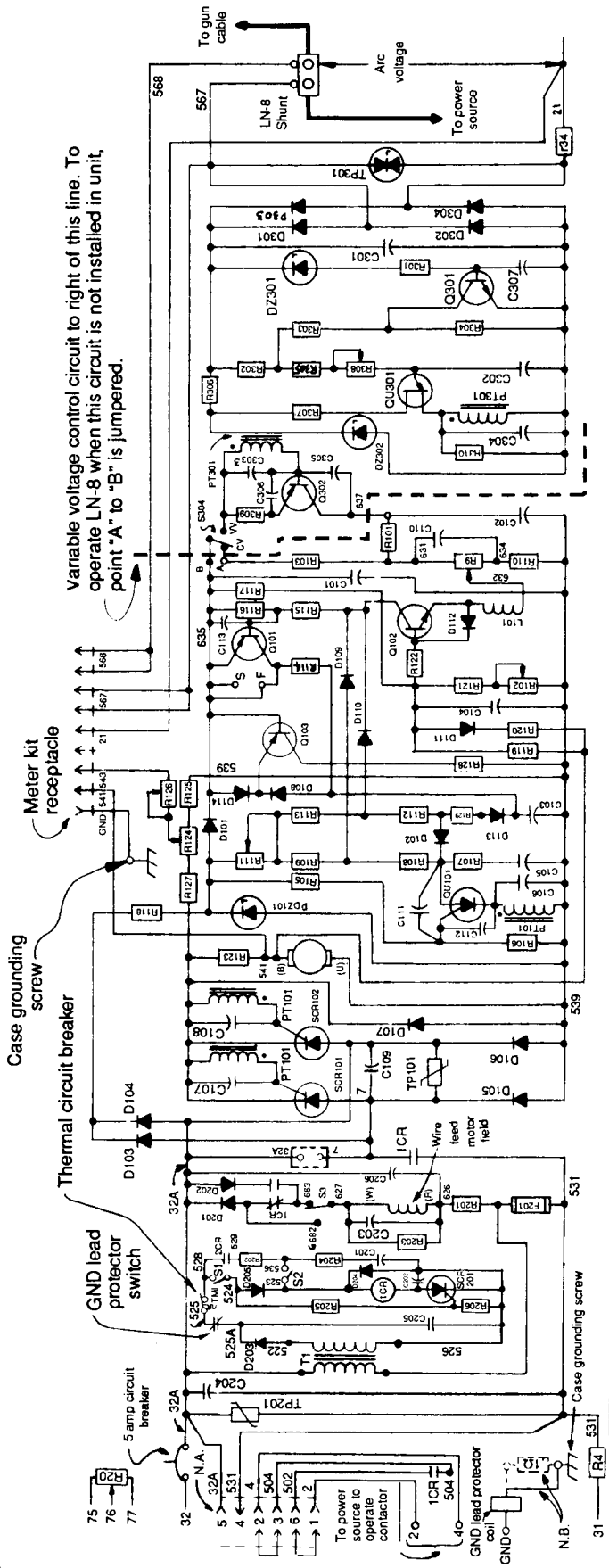

Notes:

N.A. Jumper plug is removed and connector "B" is plugged into optional burnback P.C. Board. See S15123 for operating schematic.

N.B. Resistor used on codes 9090 and below only. For codes above 9090 the grounding lead protector connects directly to the case grounding screw.

Relay Circuit (Board #2)			
C201	50MFD	C205	50MFD
C202	.02MFD	C206	.005MFD
C203	50MFD		
C204	.005MFD		
1CR	3PDT 24 V.D.C.		
D201	1A		
D202	1A		
D203	1A		
D204	1A		
D205	1A		
R201	40Ω 12W		
R202	100Ω		
R203	100KΩ		
R204	27Ω		
R205	4.7KΩ		
R206	1KΩ		
F201	1/2A. 125 V. CR 250 V. Slow Blow Fuse		
SCR201	4A	400V	
TP201	Transient Protection		

Electrical Symbols Per E-1537.

Since components or circuitry on a printed circuit board may change without affecting the interchangeability of a complete board, this diagram may not show the exact components or circuitry of controls having a common code number.

Variable Voltage Circuit (Board #3)			
C301	2MFD	R301	6.8KΩ
C302	.10MFD	R302	5.6KΩ(2%)
C303	.01MFD	R303	1KΩ(2%)
C304	.047MFD	R304	3.9KΩ(2%)
C305	.01MFD	R305	3.3KΩ
C306, C307	.02MFD	R306	4.7KΩ 2W
D301	1A	R307	100Ω
D302	1A	R308	5KΩ Trimmer
D303	1A	R309	15Ω
D304	1A	R310	47Ω
		R311	68Ω
DZ301	62V		
DZ302	10V	SS304	Power Source Selector SW
Q301	2N3393	QU301	UJT
Q302	2N4125		
PT301	1:1:1 Pulse Transformer		
TP301	Transient Protection		

Control Circuit (Board #1)			
C101	1MFD	L101	5.6MH
C102	2MFD		
C103	39MFD±10%	Q101	2N4125
C104	4.7MFD	Q102	2N4123
C105	.10MFD	Q103	2N5815
C106, C110, C111	.02MFD	QU101	2N6027
C112, C113		TP101	TRANSIENT PROTECTION
C107, C108	.047MFD	SCR101	12A. 400V
C109	.005MFD	SCR101	12A.400V.
		PT 1:1:1 PULSE TRANSFORMER	
D101	1A	R101	6.8KΩ
D102	1A	R102	2KΩ Trimmer
D103	1A	R103	10KΩ
D104	1A		
D105	16A	R105	4.7KΩ
D106	16A	R106	4.7KΩ
D107	16A	R107	15Ω
D108	1A	R108	33KΩ
D109	1A	R109	33KΩ
D110	1A	R110	750Ω
D111	1A	R111	50KΩ Trimmer
D112	1A	R112	27KΩ
D113	1A	R113	39KΩ
D114	1A	R114	10KΩ
DZ101	20V	R115	68KΩ
		R116	10KΩ
		R117	22KΩ
		R118	4.7KΩ 4W
		R119	27KΩ
		R120	15KΩ
		R121	1.5KΩ
		R122	10KΩ
		R123	.25Ω 7W
		R124	1KΩ Trimmer
		R125	4.7KΩ 4W
		R126	1KΩ Trimmer
		R127	150Ω
		R128	1KΩ
		R129	15KΩ

Components not on P.C. Board	
R4	2Ω 50W
R9	5KΩ 2W Pot.
R20	10KΩ 2W Pot.
T1	110-24V Transformer
2CR	Reed switch (actuated by welding current)
4CR	Grounding lead protector
S1	SPST Gun switch
S2	SPDT Interlock switch
S3	SPDT Direction switch

Lead Color Coding
B - Black
R - Red
U - Blue
W - White

6-1-84A

NOTES

LN-8 CONNECTION SCHEMATIC

(All Models)

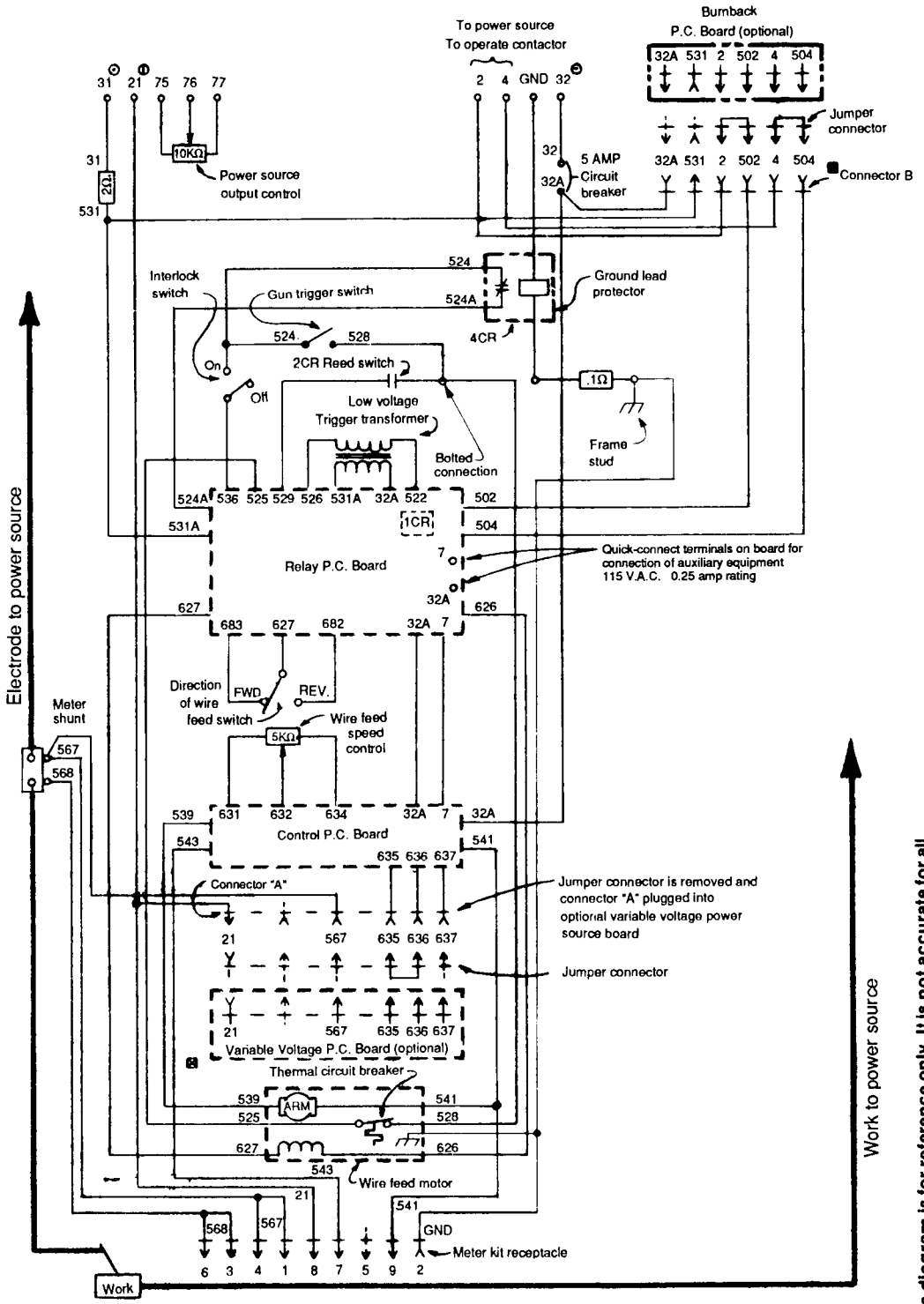

CODE	DIAGRAM
Below 7575	M-12250
7575 – 7900	M-13073

This diagram applies for machines in production at the time this manual was assembled. For earlier codes, request the appropriate diagram as listed in the table.

NOTE: This diagram is for reference only. It is not accurate for all machines covered by this manual. The specific diagram for a particular code is pasted inside the machine on one of the enclosure panels. If the diagram is illegible, write to the Service Department for a replacement. Give the welder code number.

- ⊙ 115 V.A.C. (31 and 32)
- ⊕ To power source work terminal
- ■ Jumper connector is removed and connector "B" is plugged into optional burnback p.c. board
- ■ Actuated by motor temperature

A.N.E.I. Electrical Symbols per E-1537.

5-29-81F

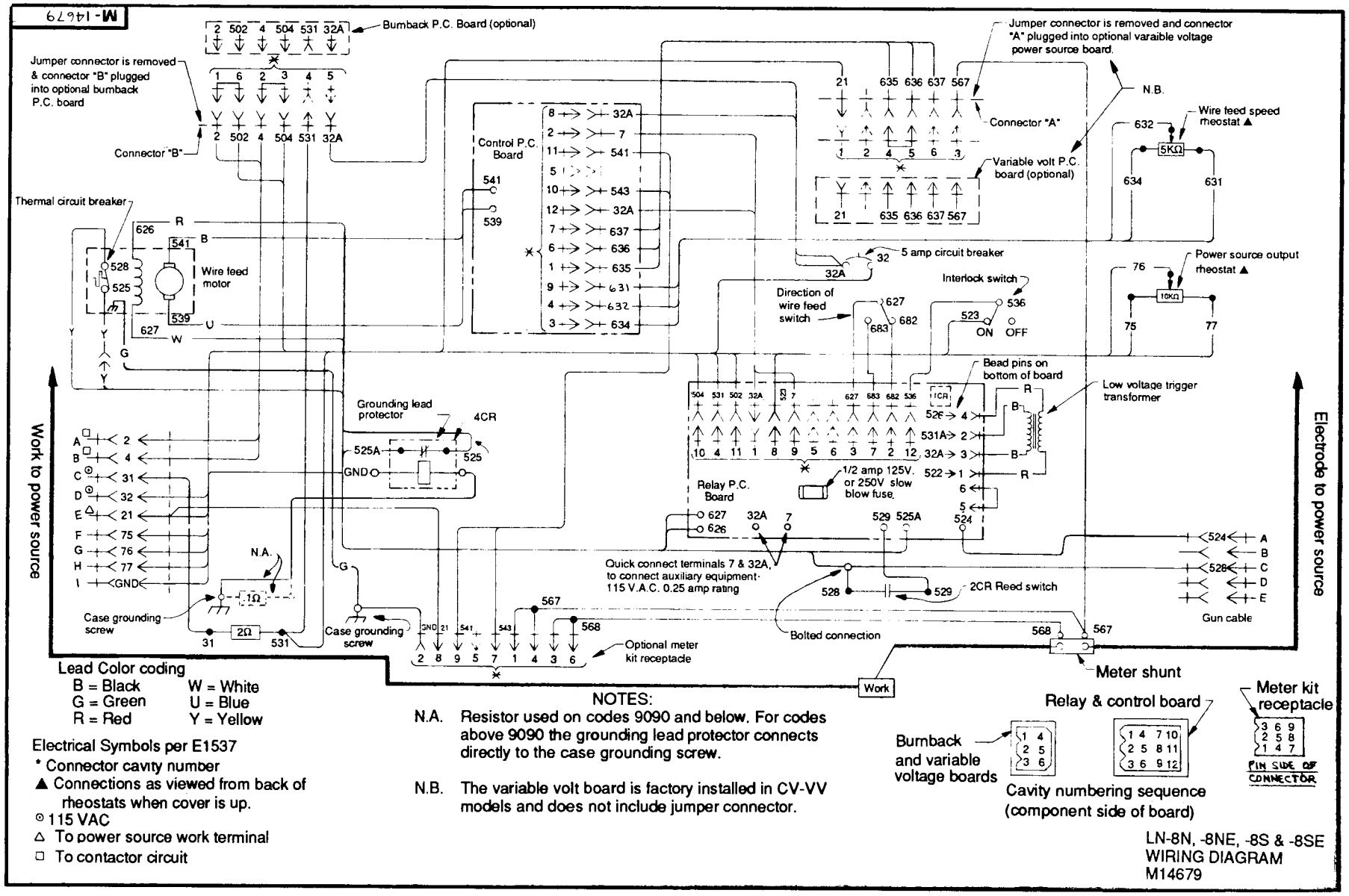

NOTE: This diagram is for reference only. It is not accurate for all machines covered by this manual. The specific diagram for a particular code is pasted inside the machine on one of the enclosure panels. If the diagram is illegible, write to the Service Department for a replacement. Give the welder code number.

LN-8N, LN-8S OPERATING SCHEMATIC

(All Models)

Notes:

N.A. Jumper plug is removed and connector "B" is plugged i optional burnback P.C. Board. See S15123 for operatin schematic.

Variable voltage control circuit to right of this line. To operate LN-8 when this circuit is not installed in unit, point "A" to "B" is jumpered.

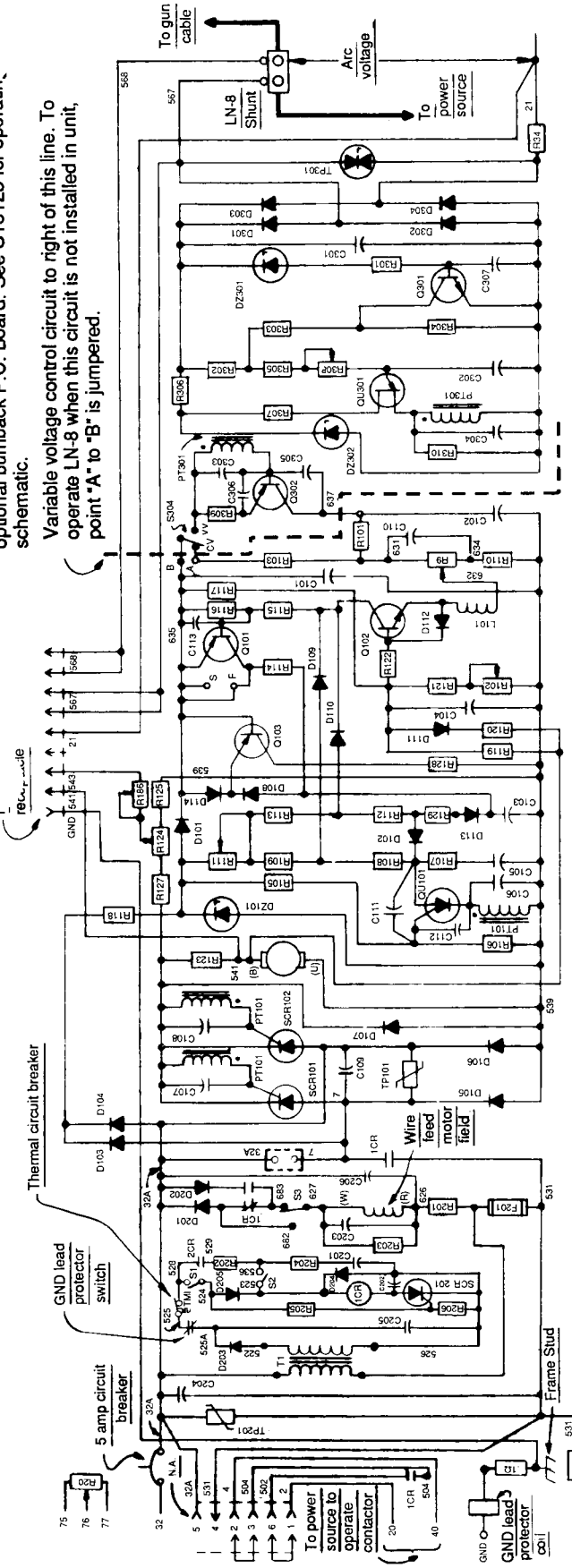

Components not on P.C. Board

R4	2Ω 50W	
R9	5KΩ 2W. POT.	
R20	10KΩ 2W. POT.	
TI	110-24Y. TRANSFORMER	
2CR	REED SWITCH (ACTUATED BY WELDING CURRENT)	
4CR	GROUNDING LEAD PROTECTOR	
S1	SPST GUN SWITCH	
S2	SPDT INTERLOCK SWITCH	
S3	SPDT DIRECTION SWITCH	

LEAD COLOR CODING
B – BLACK
R – RED
U – BLUE
W – WHITE

Electrical Symbols Per E-1537

Since components or circuitry on a printed circuit board may change without affecting the interchangeability of a complete board, this diagram may not show the exact components or circuitry of controls having a common code number.

Variable Voltage Circuit (Board #3)

C301	2MFD	R301	6.8KΩ
C302	.10MFD	R302	5.6KΩ (2%)
C303	.01MFD	R303	1KΩ (2%)
C304	.047MFD	R304	3.9KΩ(2%)
C305	.01MFD	R305	3.3KΩ
C306, C307	.02MFD	R306	4.7KΩ2W
D301	1A	R307	100Ω
D302	1A.	R308	5KΩ TRIMMER
D303	1A.	R309	15Ω
D304	1A.	R310	47Ω
		R311	68Ω
DZ301	62V.		
DZ302	10V.	S304	POWER SOURCE SELECTOR SW
Q301	2N3393		
Q302	2N4125	QU301	UJT
PT301	1:1:1 PULSE TRANSFORMER		
TP301	TRANSIENT PROTECTION		

Relay Circuit (Board #2)

C201	50MFD	C205	50MFD
C202	.02MFD	C206	.005MFD
C203	50MFD		
C204	.005 MFD		
1CR	3PDT	24V.D.C	
D201	1A.		
D202	1A.		
D203	1A.		
D204	1A.		
D205	1A.		
R201	40Ω12W		
R202	100Ω		
R203	100KΩ		
R204	27Ω		
R205	4.7KΩ		
R206	1KΩ		
F201	1/2A.	125V. CR 250 V. SLOW BLOW FUSE	
SCR201	4A	400V	
TP201	TRANSIENT PROTECTION		

Control Circuit (Board #1)

C101	1MFD	L101	5.6MH
C102	2MFD		
C103	39MFD ±10%	Q101	2N4125
C104	4.7MFD	Q102	2N4123
C105	.10MFD	Q103	2N5815
C106, C110, C111	.02MFD	QU101	2N6027
C112, C113		TP101 TRANSIENT PROTECTION	
C107, C108	.047 MFD	SCR101	12A. 400V.
C109	.005MFD	SCR102	12A. 400V
		PT101	1:1:1 PULSE TRANSFORMER
D101	1A.	R101	6.8KΩ
D102	1A.	R102	2KΩ Trimmer
D103	1A.	R103	10KΩ
D104			
D105	16A.	R105	4.7KΩ
D106	16A.	R106	4.7KΩ
D107	16A.	R107	15Ω
D108	1A.	R108	33KΩ
D109	1A.	R109	33KΩ
D110	1A.	R110	750Ω
D111	1A.	R111	50KΩTrimmer
D112	1A.	R112	27KΩ
D113	1A.	R113	39KΩ
D114	1A.	R114	10KΩ
DZ101	20V.	R115	68KΩ
		R116	10KΩ
		R117	22KΩ
		R118	4.7KΩ4W
		R119	27KΩ
		R120	15KΩ
		R121	1.5KΩ
		R122	10KΩ
		R123	.25Ω7W
		R124	1KΩTRIMMER
		R125	4.7KΩ4W
		R126	1KΩTRIMMER
		R127	150Ω
		R128	1KΩ
		R129	15KΩ

NOTE: This diagram is for reference only. It is not accurate for all machines covered by this manual. The specific diagram for a particular code is pasted inside the machine on one of the enclosure panels. If the diagram is illegible, write to the Service Department for a replacement. Give the welder code number.

CODE	DIAGRAM
Below 7575	M-12251
7575 – 7900	M-13072

This diagram applies for machines in production at the time this manual was assembled. For earlier codes, request the appropriate diagram as listed in the table.

The Lincoln Electric Company
Cleveland, Ohio 44117

K-161 POWER PACK WIRING DIAGRAM

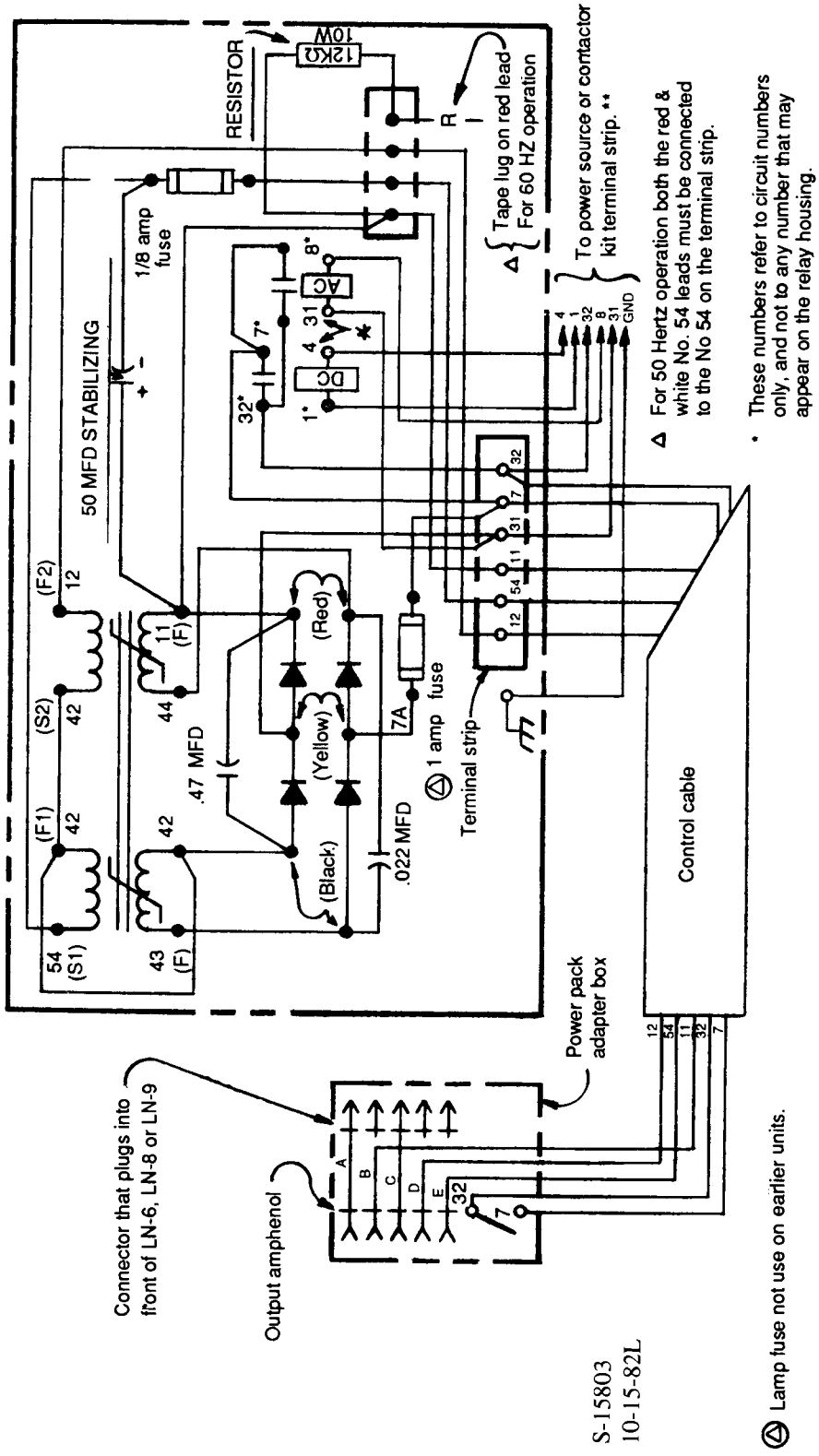

** If the power source or contactor kit has terminals 31, 32, and 4, but no terminal 1, connect leads 31 and 32 from the power pack to their respective terminals on the terminal strip. Connect lead 8 from the power pack to terminal 4 on the terminal strip. Tape separately the lugs on leads 1 and 4. Connect the green lead from the power pack to the frame of the power source or contactor kit by means of the frame stud near the terminal strip or other secure electrical connection.

If the power source or contactor kit has terminals 31. 32. 4. and 1, connect leads 31. 32. 4. and 1 from the power pack to their respective terminals on the terminal strip. Tape up the lug on lead 8. Connect the green lead from the power pack to the power source or contactor kit by means of the frame stud near the terminal strip or other secure electrical connection.

The Lincoln Electric Company
Cleveland, Ohio 44117-1199

T12309
Wiring Diagram
10-15-82L

K114 GUN CABLE AND K110 DRIVE UNIT

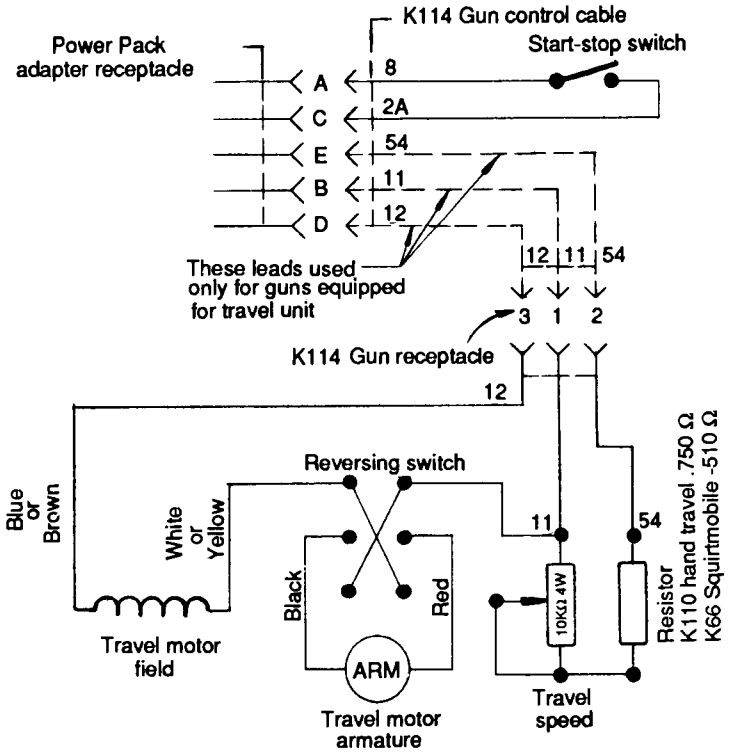

MECHANIZED TRAVEL SCHEMATIC

T12834
Wiring Diagram
10-15-82L

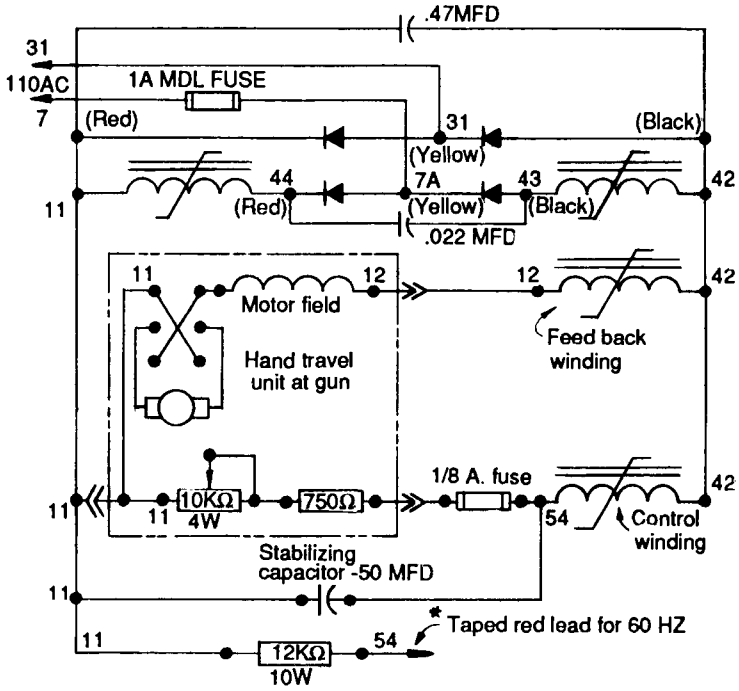

* For 50 HZ operation both red & black No. 54 leads must be connected to No. 54 on power pack terminal strip.

NOTES

WARNING	● Do not touch electrically live parts or electrode with skin or wet clothing. ● Insulate yourself from work and ground.	● Keep flammable materials away.	● Wear eye, ear and body protection.
Spanish **AVISO DE PRECAUCION**	● No toque las partes o los electrodos bajo carga con la piel o ropa mojada. ● Aíslese del trabajo y de la tierra.	● Mantenga el material combustible fuera del área de trabajo.	● Protéjase los ojos, los oídos y el cuerpo.
French **ATTENTION**	● Ne laissez ni la peau ni des vêtements mouillés entrer en contact avec des pièces sous tension. ● Isolez-vous du travail et de la terre.	● Gardez à l'écart de tout matériel inflammable.	● Protégez vos yeux, vos oreilles et votre corps.
German **WARNUNG**	● Berühren Sie keine stromführenden Teile oder Elektroden mit Ihrem Körper oder feuchter Kleidung! ● Isolieren Sie sich von den Elektroden und dem Erdboden!	● Entfernen Sie brennbares Material!	● Tragen Sie Augen-, Ohren- und Körperschutz!
Portuguese **ATENÇÃO**	● Não toque partes elétricas e electrodos com a pele ou roupa molhada. ● Isole-se da peça e terra.	● Mantenha inflamáveis bem guardados.	● Use proteção para a vista, ouvido e corpo.
Japanese **注意事項**	● 通電中の電気部品、又は溶材にヒフやぬれた布で触れないこと。 ● 施工物やアースから身体が絶縁されている様にして下さい。	● 燃えやすいものの側での溶接作業は絶対にしてはなりません。	● 目、耳及び身体に保護具をして下さい。
Chinese **警 告**	● 皮肤或濕衣物切勿接觸帶電部件及銲條。 ● 使你自己與地面和工件絶緣。	● 把一切易燃物品移離工作場所。	● 佩戴眼、耳及身體勞動保護用具。
Korean **위 험**	● 전도체나 용접봉을 젖은 헝겁 또는 피부로 절대 접촉치 마십시요. ● 모재와 접지를 접촉치 마십시요.	● 인화성 물질을 접근 시키지 마시요.	● 눈, 귀와 몸에 보호장구를 착용하십시요.
Arabic **تحذير**	● لا تلمس الاجزاء التي يسري فيها التيار الكهربائي أو الالكترود بجلد الجسم أو بالملابس المبللة بالماء. ● ضع عازلا على جسمك خلال العمل.	● ضع المواد القابلة للاشتعال في مكان بعيد.	● ضع أدوات وملابس واقية على عينيك وأذنيك وجسمك.

READ AND UNDERSTAND THE MANUFACTURER'S INSTRUCTION FOR THIS EQUIPMENT AND THE CONSUMABLES TO BE USED AND FOLLOW YOUR EMPLOYER'S SAFETY PRACTICES.

LISEZ ET COMPRENEZ LES INSTRUCTIONS DU FABRICANT EN CE QUI REGARDE CET EQUIPMENT ET LES PRODUITS A ETRE EMPLOYES ET SUIVEZ LES PROCEDURES DE SECURITE DE VOTRE EMPLOYEUR.

SE RECOMIENDA LEER Y ENTENDER LAS INSTRUCCIONES DEL FABRICANTE PARA EL USO DE ESTE EQUIPO Y LOS CONSUMIBLES QUE VA A UTILIZAR, SIGA LAS MEDIDAS DE SEGURIDAD DE SU SUPERVISOR.

LESEN SIE UND BEFOLGEN SIE DIE BETRIEBSANLEITUNG DER ANLAGE UND DEN ELEKTRODENEINSATZ DES HERSTELLERS. DIE UNFALLVERHÜTUNGSVORSCHRIFTEN DES ARBEITGEBERS SIND EBENFALLS ZU BEACHTEN.

● Keep your head out of fumes. ● Use ventilation or exhaust to remove fumes from breathing zone.	● Turn power off before servicing.	● Do not operate with panel open or guards off.	**WARNING**
● Los humos fuera de la zona de respiración. ● Mantenga la cabeza fuera de los humos. Utilice ventilación o aspiración. para gases.	● Desconectar el cable de alimentación de poder de la máquina antes de iniciar cualquier servicio.	● No operar con panel abierto o guardas quitadas.	Spanish **AVISO DE PRECAUCION**
● Gardez la tête à l'écart des fumées. ● Utilisez un ventilateur ou un aspirateur pour ôter les fumées des zones de travail.	● Débranchez le courant avant l'entretien.	● N'opérez pas avec les panneaux ouverts ou avec les dispositifs de protection enlevés.	French **ATTENTION**
● Vermeiden Sie das Einatmen von Schwelbrauch! ● Sorgen Sie für gute Be- und Entlüftung des Arbeitsplatzes!	● Strom vor Wartungsarbeiten abschalten! (Netzstrom völlig öffnen; Maschine anhalten!)	● Anlage nie ohne Schutzgehäuse oder Innenschutzverkleidung in Betrieb setzen!	German **WARNUNG**
● Mantenha seu rosto da fumaça. ● Use ventilação e exhaustão para remover fumo da zona respiratória.	● Não opere com as tampas removidas. ● Desligue a corrente antes de fazer serviço. ● Não toque as partes elétricas nuas.	● Mantenha-se afastado das partes moventes. ● Não opere com os painels abertos ou guardas removidas.	Portuguese **ATENÇÃO**
● ヒュームから頭を離すようにして下さい。 ● 換気や排煙に十分留意して下さい。	● メンテナンス・サービスに取りかかる際には、まず電源スイッチを必ず切って下さい。	● パネルやカバーを取り外したままで機械操作をしないで下さい。	Japanese **注意事項**
●頭部遠離煙霧。 ●在呼吸區使用通風或排風器除煙。	● 維修前切斷電源。	●儀表板打開或沒有安全罩時不準作業。	Chinese **警 告**
● 얼굴로부터 용접가스를 멀리하십시요. ● 호흡지역으로부터 용접가스를 제거하기 위해 가스제거기나 통풍기를 사용하십시요.	● 보수전에 전원을 차단하십시요.	● 판넬이 열린 상태로 작동치 마십시요.	Korean **위 험**
● ابعد رأسك بعيداً عن الدخان. ● استعمل التهوية أو جهاز ضغط الدخان للخارج لكي تبعد الدخان عن المنطقة التي تتنفس فيها.	● اقطع التيار الكهربائي قبل القيام بأية صيانة.	● لا تشغل هذا الجهاز اذا كانت الاغطية الحديدية الواقية ليست عليه.	Arabic **تحذير**

LEIA E COMPREENDA AS INSTRUÇÕES DO FABRICANTE PARA ESTE EQUIPAMENTO E AS PARTES DE USO, E SIGA AS PRÁTICAS DE SEGURANÇA DO EMPREGADOR.

使う機械や溶材のメーカーの指示書をよく読み、まず理解して下さい。そして貴社の安全規定に従って下さい。

請詳細閱讀並理解製造廠提供的説明以及應該使用的銀捍材料，並請遵守貴方的有関勞動保護規定。

이 제품에 동봉된 작업지침서를 숙지하시고 귀사의 작업자 안전수칙을 준수하시기 바랍니다.

اقرأ بتمعن وافهم تعليمات المصنع المنتج لهذه المعدات والمواد قبل استعمالها واتبع تعليمات الوقاية لصاحب العمل.

LINCOLN® ELECTRIC

• World's Leader in Welding and Cutting Products •

• Sales and Service through Subsidiaries and Distributors Worldwide •

Cleveland, Ohio 44117-1199 U.S.A. TEL: 216.481.8100 FAX: 216.486.1751 WEB SITE: www.lincolnelectric.com